BS EN 81-22:2014

BSI Standards Publication

Safety rules for the construction and installation of lifts — Lifts for the transport of persons and goods

Part 22: Electric lifts with inclined path

bsi.

...making excellence a habit.™

National foreword

This British Standard is the UK implementation of EN 81-22:2014.

The UK participation in its preparation was entrusted to Technical Committee MHE/4, Lifts, hoists and escalators.

A list of organizations represented on this committee can be obtained on request to its secretary.

This publication does not purport to include all the necessary provisions of a contract. Users are responsible for its correct application.

Published by BSI Standards Limited 2014

ISBN 978 0 580 81297 2
ICS 91.140.90

Compliance with a British Standard cannot confer immunity from legal obligations.

This British Standard was published under the authority of the Standards Policy and Strategy Committee on 30 June 2014.

Amendments/corrigenda issued since publication

Date	Text affected

EUROPEAN STANDARD

NORME EUROPÉENNE

EUROPÄISCHE NORM

EN 81-22

May 2014

ICS 91.140.90

English Version

Safety rules for the construction and installation of lifts - Lifts for the transport of persons and goods - Part 22: Electric lifts with inclined path

Règles de sécurité pour la construction et l'installation des ascenseurs - Ascenseurs pour le transport de personnes et d'objets - Partie 22 : Ascenseurs électriques à voie inclinée

Sicherheitsregeln für die Konstruktion und den Einbau von Aufzügen - Aufzüge für den Personen- und Gütertransport - Teil 22: Elektrisch betriebene Aufzüge mit geneigter Fahrbahn

This European Standard was approved by CEN on 4 February 2014.

CEN members are bound to comply with the CEN/CENELEC Internal Regulations which stipulate the conditions for giving this European Standard the status of a national standard without any alteration. Up-to-date lists and bibliographical references concerning such national standards may be obtained on application to the CEN-CENELEC Management Centre or to any CEN member.

This European Standard exists in three official versions (English, French, German). A version in any other language made by translation under the responsibility of a CEN member into its own language and notified to the CEN-CENELEC Management Centre has the same status as the official versions.

CEN members are the national standards bodies of Austria, Belgium, Bulgaria, Croatia, Cyprus, Czech Republic, Denmark, Estonia, Finland, Former Yugoslav Republic of Macedonia, France, Germany, Greece, Hungary, Iceland, Ireland, Italy, Latvia, Lithuania, Luxembourg, Malta, Netherlands, Norway, Poland, Portugal, Romania, Slovakia, Slovenia, Spain, Sweden, Switzerland, Turkey and United Kingdom.

EUROPEAN COMMITTEE FOR STANDARDIZATION
COMITÉ EUROPÉEN DE NORMALISATION
EUROPÄISCHES KOMITEE FÜR NORMUNG

CEN-CENELEC Management Centre: Avenue Marnix 17, B-1000 Brussels

Ref. No. EN 81-22:2014 E

Contents

Page

Foreword

This document (EN 81-22:2014) has been prepared by Technical Committee CEN/TC 10 “Lifts, escalators and moving walks”, the secretariat of which is held by AFNOR.

This European Standard shall be given the status of a national standard, either by publication of an identical text or by endorsement, at the latest by November 2014, and conflicting national standards shall be withdrawn at the latest by November 2014.

Attention is drawn to the possibility that some of the elements of this document may be the subject of patent rights. CEN [and/or CENELEC] shall not be held responsible for identifying any or all such patent rights.

This document has been prepared under a mandate given to CEN by the European Commission and the European Free Trade Association, and supports essential requirements of EU Directive(s).

For relationship with EU Directive(s), see informative Annex ZA, which is an integral part of this document.

This document is part of the EN 81 series of standards, *Safety rules for the construction and installation of lifts.*

This is the first edition of this European Standard.

According to the CEN-CENELEC Internal Regulations, the national standards organizations of the following countries are bound to implement this European Standard: Austria, Belgium, Bulgaria, Croatia, Cyprus, Czech Republic, Denmark, Estonia, Finland, Former Yugoslav Republic of Macedonia, France, Germany, Greece, Hungary, Iceland, Ireland, Italy, Latvia, Lithuania, Luxembourg, Malta, Netherlands, Norway, Poland, Portugal, Romania, Slovakia, Slovenia, Spain, Sweden, Switzerland, Turkey and the United Kingdom.

0 Introduction

0.1 General

This document is a type C standard as stated in EN ISO 12100.

The machinery concerned and the extent, to which hazards, hazardous situations and events are covered, are indicated in the scope of this standard.

When provisions of this type C standard are different from those which are stated in type A or B standards, the provisions of this type C standard take precedence over the provisions of the other standards, for machines that have been designed and built according to the provisions of this type C standard.

The purpose of this standard is to define safety requirements for inclined lifts in order to safeguard persons and objects against risks of accidents during installation, operation, maintenance, inspection work and emergency operations of lifts.

0.2 Considerations

Consideration has been taken into account of various categories of lifts with inclined travel path to ascertain the related hazards and risks owing to the configuration of structures (civil engineering works), inclination and outside influences such as the following:

a) the large opening to the exterior;

b) the possibility to walk around inside the lift well;

c) the arrangement of the doors;

d) the horizontal component of deceleration in the event of stopping of the vehicle.

The prescriptions relating to the protection of workers and to the evacuation from the car are different when it is possible to walk inside the well and when the car roof is used as working station for the maintenance.

An Interpretation Committee has been established to clarify, if necessary, the spirit in which the clauses of the standard have been drafted and to specify the requirements appropriate to particular cases. Interpretation Requests can be sent to the National Standard Bodies which will contact the responsible Technical Committee CEN/TC 10 (see CEN/TR 81-10 [1] for information).

0.3 Principles

In drawing up this standard the following have been used.

This standard does not repeat all the general technical rules applicable to every electrical, mechanical, or building construction including the protection of building elements against fire.

It has, however, seemed necessary to establish certain requirements of good construction, either because they are peculiar to lift manufacture or because in the case of lift utilization the requirements may be more stringent than elsewhere.

This standard does not only address the essential safety requirements of the Lift Directive, but additionally states minimum rules for the installation of lifts into buildings/constructions. There may be in some countries regulations for the construction of buildings, etc. which cannot be ignored.

Typical clauses affected by this are those defining minimum values for the height of the machine and pulley rooms and for their access doors dimensions.

When the weight, size and/or shape of components prevent them from being moved by hand, they are:

a) either fitted with attachments for lifting gear, or

b) designed so that they can be fitted with such attachments (e.g. by means of threaded holes), or

c) shaped in such a way that standard lifting gear can easily be attached.

As far as possible the standard sets out only the requirements that materials and equipment will meet in the interests of safe operation of lifts.

0.4 Assumptions

The contents of this standard are based on the assumption that persons using inclined lifts are able to do so unaided.

It is assumed that negotiations have been made for each contract between the customer and the supplier/installer (see also Annex O) about:

a) intended use of the inclined lift;

b) environmental conditions;

c) civil engineering problems;

d) other aspects relating to the place of installation (e.g. high-voltage electric line, bridges, dangerous buildings, natural obstacle).

Possible risks have been considered of each component that may be incorporated in a complete lift installation. Rules have been drawn up accordingly.

Components are:

— designed in accordance with usual engineering practice and calculation codes, taking into account all failure modes;

— of sound mechanical and electrical construction;

— made of materials with adequate strength and of suitable quality;

— be free of defects.

Harmful materials, such as asbestos are not used.

Components are kept in good repair and working order, so that the required dimensions remain fulfilled despite wear.

Components will be selected and installed so that foreseeable environmental influences and special working conditions do not affect the safe operation of the lift.

Especially for the extreme temperatures which were agreed between the customer and the supplier, the choice of materials and components will be made with particular attention that they keep their characteristics for impact strength for the steel, rigidity and function for plastics, functional for the electronic components, viscosity for oils, etc.

By design of the load bearing elements, a safe operation of the lift is ensured for loads ranging up to 125 % (static) and up to 110 % (dynamic) of the rated load.

The requirements of this European Standard regarding electrical safety devices are such that the possibility of a failure of an electric safety device (see 5.11.1.2) complying with all the requirements of this European Standard need not be taken into consideration."

Users should be safeguarded against their own negligence and unwitting carelessness when using the lift in the intended way.

A user may, in certain cases, make one imprudent act. The possibility of two simultaneous acts of imprudence and/or the abuse of instructions for use is not considered.

If in the course of maintenance work a safety device, normally not accessible to the users, is deliberately neutralized, safe operation of the lift is no longer ensured, but compensatory measures will be taken to ensure users safety in conformity with maintenance instructions.

It is assumed that maintenance personnel is instructed and works according to the instructions.

Horizontal forces and/or energies to consider are indicated in the applicable clauses of the standard. Typically:

— the static force that a person normally exerts is of the magnitude of 300 N;

— the energies resulting from impact depend on the lift component where the impact can occur; if not otherwise specified the resulting force is assumed to be 1 000 N.

With the exception of the items listed below, a mechanical device built according to good practice and the requirements of the standard will not deteriorate to a point of creating hazard without the possibility of detection.

The following mechanical failures are considered:

— breakage of the suspension;

— uncontrolled slipping of the ropes on the traction sheave;

— breakage and slackening of all linkage by auxiliary ropes, chains and belts;

— failure of one of the mechanical components of the electromechanical brake which take part in the application of the braking action on the drum or disk;

— failure of a component associated with the main drive elements and the traction sheave;

— ropes leaving the pulleys and, in case of change of inclination, leaving the rollers;

— blockage of the rope movement;

— blockage or derailment of the vehicle.

The possibility of the safety gear not setting, should the vehicle free fall from the lowest landing, before the vehicle strikes the buffer(s) is considered acceptable.

When the speed of the vehicle is linked to the electrical frequency of the mains up to the moment of application of the mechanical brake, the speed is assumed not to exceed 115 % of the rated speed or a corresponding fractional speed.

Means of access are provided for the hoisting of heavy equipment.

To ensure the correct functioning of the equipment in the machinery space(s), i.e. taking into account the heat dissipated by the equipment, the ambient temperature in the machine room is assumed to be maintained between + 5 °C and + 40 °C.

Access ways to the working areas are adequately lit.

Minimum passageways required by building regulations are not obstructed by the open door/trap of the lift and/or any protection means for working areas outside of the well, where fitted according to the maintenance instructions (see above Principles).

Where more than one person is working at the same time on a lift, an adequate means of communication between these persons is ensured.

The fixing system of guards, which will be removed during maintenance and inspection, remains attached to the guard or to the equipment when the guard is removed.

1 Scope

1.1 This European Standard specifies the safety rules for the construction and installation of permanently installed new electric lifts, with traction or positive drive, serving defined landings levels, having a vehicle designed to convey passengers or passengers and loads, suspended by ropes or chains and travelling in a vertical plan along guide rails that are inclined at an angle of between 15° and 75° in relation to the horizontal.

1.2 In addition to the requirements of this standard, supplementary requirements should be considered in special cases (potentially explosive atmosphere, extreme climate conditions, seismic conditions, transporting dangerous goods, etc.).

1.3 This European Standard does not cover:

a) lifts with drives other than those stated in 1.1;

b) installation of electric lifts in existing buildings to the extent that space does not permit;

c) important modifications (see Annex E) to a lift installed before this standard is brought into application;

d) lifting appliances, such as paternosters, mine lifts, theatrical lifts, appliances with automatic caging, skips, lifts and hoists for building and public works sites, ships' hoists, platforms for exploration or drilling at sea, construction and maintenance appliances;

e) safety during transport, installation, repairs, and dismantling of lifts;

f) lifts with rated speed ≤ 0,15 m/s.

However, this standard may usefully be taken as a basis.

Noise is not dealt with in this standard because it is not relevant to the safe use of the lift.

Vibrations are dealt with for electric parts only. Direct effects on human bodies are not considered as harmful.

1.4 This European Standard does not specify the additional requirements necessary for the use of lifts in case of fire.

1.5 Taking into account the state of art, the scope of the present standard is limited as follows:

— inclination: a variation in inclination is permitted for the travel path;

— travel path: confined within the vertical plane;

— maximum capacity of the car: 7 500 kg (100 passengers);

— maximum rated speed (v): 4 m/s.

Both characteristics (capacity and speed) are linked by the relation given in the following Figure 1.

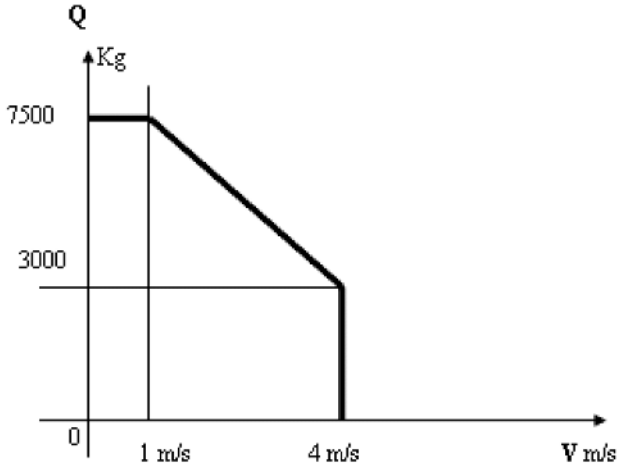

Key

Q maximum capacity

V rated speed

Figure 1 — Speed and capacity

The standard applies to all the constituent components of the lift including: running tracks, guides, safety gear operating device, counter-rails, but excludes the supporting structures, civil engineering structures and anchorages that are dealt with by other regulations.

1.6 This standard is not applicable for inclined lifts which are manufactured before the date of its publication as EN.

2 Normative references

The following documents, in whole or in part, are normatively referenced in this document and are indispensable for its application. For dated references, only the edition cited applies. For undated references, the latest edition of the referenced document (including any amendments) applies.

EN 81-1:1998+A3:2009, *Safety rules for the construction and installation of lifts — Part 1: Electric lifts*

EN 81-28:2003, *Safety rules for the construction and installation of lifts — Lifts for the transport of persons and goods — Part 28: Remote alarm on passenger and goods passenger lifts*

EN 81-58:2003, *Safety rules for the construction and installation of lifts — Examination and tests — Part 58: Landing doors fire resistance test*

EN 131-2:2010+A1:2012, *Ladders — Part 2: Requirements, testing, marking*

EN 10025-2:2004, *Hot rolled products of structural steels — Part 2: Technical delivery conditions for non-alloy structural steels*

EN 12015:2014, *Electromagnetic compatibility — Product family standard for lifts, escalators and moving walks — Emission*

EN 12016:2013, *Electromagnetic compatibility — Product family standard for lifts, escalators and moving walks — Immunity*

EN 13015:2001+A1:2008, *Maintenance for lifts and escalators — Rules for maintenance instructions*

EN 13796-1:2005, *Safety requirements for cableway installations designed to carry persons — Carriers — Part 1: Grips, carrier trucks, on-board brakes, cabins, chairs, carriages, maintenance carriers, tow-hangers*

EN 50214:2006, *Flat polyvinyl chloride sheathed flexible cables*

EN 60068-2-6:2008, *Environmental testing — Part 2-6: Tests — Test Fc: Vibration (sinusoidal) (IEC 60068-2-6:2007)*

EN 60068-2-14:2009, *Environmental testing — Part 2-14: Tests — Test N: Change of temperature (IEC 60068-2-14:2009)*

EN 60068-2-27:2009, *Environmental testing — Part 2-27: Tests — Test Ea and guidance: Shock (IEC 60068-2-27:2008)*

EN 60204-1:2006, *Safety of machinery — Electrical equipment of machines — Part 1: General requirements (IEC 60204-1:2005, modified)*

EN 60269-1:2007, *Low-voltage fuses — Part 1: General requirements (IEC 60269-1:2006)*

EN 60529:1991, *Degrees of protection provided by enclosures (IP Code) (IEC 60529:1989)*[1)]

EN 60747-5-5:2011, *Semiconductor devices — Discrete devices — Part 5-5: Optoelectronic devices — Photocouplers (IEC 60747-5-5:2007)*

EN 60664-1:2007, *Insulation coordination for equipment within low-voltage systems — Part 1: Principles, requirements and tests (IEC 60664-1:2007)*

EN 60947-4-1:2010, *Low-voltage switchgear and controlgear — Part 4-1: Contactors and motor-starters — Electromechanical contactors and motor-starters (IEC 60947-4-1:2009)*

EN 60947-5-1:2004, *Low-voltage switchgear and controlgear — Part 5-1: Control circuit devices and switching elements — Electromechanical control circuit devices (IEC 60947-5-1:2003)*[2)]

EN 61249-2 (all parts), *Materials for printed boards and other interconnecting structures — Part 2: Reinforced base materials, clad and unclad (IEC 61249-2, all parts)*

EN 61439-1:2011, *Low-voltage switchgear and controlgear assemblies — Part 1: General rules (IEC 61439-1:2011)*

EN 61508-1:2010, *Functional safety of electrical/electronic/programmable electronic safety-related systems — Part 1: General requirements (IEC 61508-1:2010)*

EN 61508-2:2010, *Functional safety of electrical/electronic/programmable electronic safety-related systems — Part 2: Requirements for electrical/electronic/programmable electronic safety-related systems (IEC 61508-2:2010)*

EN 61508-3:2010, *Functional safety of electrical/electronic/programmable electronic safety-related systems — Part 3: Software requirements (IEC 61508-3:2010)*

EN 61508-7:2010, *Functional safety of electrical/electronic/programmable electronic safety related systems — Part 7: Overview of techniques and measures (IEC 61508-7:2010)*

---

1) This document is currently impacted by EN 60529:1991/A1:2000 and EN 60529:1991/A2:2013.

2) This document is currently impacted by EN 60947-5-1:2004/A1:2009.

EN 61558-1:2005, *Safety of power transformers, power supplies, reactors and similar products — Part 1: General requirements and tests (IEC 61558-1:2005)*

EN 61800-5-2:2007, *Adjustable speed electrical power drive systems — Part 5-2: Safety requirements — Functional (IEC 61800-5-2:2007)*

EN 62326-1:2002, *Printed boards — Part 1: Generic specification (IEC 62326-1:2002)*

EN ISO 12100:2010, *Safety of machinery — General principles for design — Risk assessment and risk reduction (ISO 12100:2010)*

EN ISO 13857:2008, *Safety of machinery — Safety distances to prevent hazard zones being reached by upper and lower limbs (ISO 13857:2008)*

HD 21.3 S3, *Polyvinyl chloride insulated cables of rated voltages up to and including 450/750 V — Part 3: Non-sheathed cables for fixed wiring (IEC 60227-3)*

HD 21.4 S2, *Polyvinyl chloride insulated cables of rated voltages up to and including 450/750 V — Part 4: Sheathed cables for fixed wiring (IEC 60227-4)*

HD 21.5 S3, *Polyvinyl chloride insulated cables of rated voltages up to and including 450/750 V — Part 5: Flexible cables (cords) (IEC 60227-5)*

HD 22.4 S4, *Cables of rated voltages up to and including 450/750 V and having cross-linked insulation — Part 4: Cords and flexible cables*

HD 214 S2, *Method for determining the comparative and the proof tracking indices of solid insulating materials under moist conditions (IEC 60112)*

HD 60364-4-41:2007, *Low-voltage electrical installations — Part 4-41: Protection for safety — Protection against electric shock (IEC 60364-4-41:2005, modified)*

HD 60364-6:2007, *Low-voltage electrical installations — Part 6: Verification (IEC 60364-6:2006, modified)*

ISO 7465:2007, *Passenger lifts and service lifts — Guide rails for lift cars and counterweights — T-type*

3 Terms and definitions, symbols and abbreviated terms

3.1 Terms and definitions

For the purposes of this document, the terms and definitions given in EN ISO 12100:2010, EN 81-1:1998+A3:2009 and the following apply.

NOTE The term “lift” in this documents means “lift with an inclined travel path”.

3.1.1
building
civil engineering works

3.1.2
angle of inclination
α
(angle d’inclinaison) (Neigungswinkel)
angle between the travel path as measured against the horizontal

3.1.3
apron
(garde-pieds) (Schürze)
smooth vertical part extending downwards from the sill of the landing or car entrance

3.1.4
balancing weight
(masse d'équilibrage) (Ausgleichgewicht)
mass which saves energy by balancing all or part of the mass of the vehicle

3.1.5
buffer
(amortisseur) (Puffer)
resilient stop at the end of travel, and comprising a means of braking using fluids or springs (or other similar means)

3.1.6
car
(cabine) (Fahrkorb)
load carrier being part of the vehicle which carries the passengers and/or other loads and which can be supported by a sling or mounted on a carriage

Note 1 to entry: A car can consist of several sections separated by a wall or a handrail.

3.1.7
carriage
(chariot) (Fahrwerk)
structure hitched to traction devices on which the car and other elements are mounted

Note 1 to entry: Running/sliding elements, safety gear, shock absorbers can belong to the latter elements.

3.1.8
compensating rope
(cable de compensation) (Ausgleichsseil)
rope to be used for compensating one or all parts of the variations of weight of the traction ropes

3.1.9
counterweight
(contrepoids) (Gegengewicht)
mass which ensures traction

3.1.10
counter-guide rail
(contre-rail) (Schutzschiene)
rigid element that maintains the vehicle within the dynamic envelope

3.1.11
dynamic envelope
(gabarit dynamique) (Lichtraumprofil)
envelope surface of the final limits

Note 1 to entry: The dynamic envelope could be taken by all of the moving parts (e.g. car, carriage, sprocket, ropes, pulleys) taking into account wear and clearances, anticipated deformation and lateral motion caused by transverse forces to the trajectory. Breakages are not considered except for the running/sliding elements.

3.1.12
electric safety chain
(chaîne électrique des sécurités) (elektrische Sicherheitskette)
total of the electric safety devices connected in series

3.1.13
front-mounted door
(porte frontale) (Fronttür)
door whose vertical plane is at 90 degrees to the travel path of the vehicle

3.1.14
goods passenger lift
(ascenseur de charge)[3)] (Lastenaufzug)
lift mainly intended for the transport of goods, which are generally accompanied by persons

3.1.15
guide rails
(guides) (Führungsschienen)
rigid components which provide guiding for the vehicle, the counterweight or the balancing weight

3.1.16
headroom
(partie supérieure de la gaine) (Schachtkopf)
part of the well at its top end

3.1.17
instantaneous safety gear
(parachute à prise instantanée) (Sperrfangvorrichtung)
safety gear in which the full gripping action on the guide rails is almost immediate

3.1.18
instantaneous safety gear with buffered effect
(parachute à prise instantanée avec effet amorti) (Sperrfangvorrichtung mit Dämpfung)
safety gear in which the full gripping action on the guide rails is almost immediate

Note 1 to entry: The reaction on the vehicle, counterweight or balancing weight is limited by presence of an intermediate buffering system.

3.1.19
laminated glass
(verre feuilleté) (Verbundsicherheitsglas VSG)
assembly of two or more glass layers, each of which is bonded together using a plastic film

3.1.20
levelling
(nivelage) (Einfahren)
operation which improves the accuracy of stopping at landings

3.1.21
levelling accuracy
(precision du maintien au niveau) (Nachregulierungsgenauigkeit)
vertical distance between car sill and landing sill during loading or unloading of the car

---

3) The French expression “ascenseur de charge” has been introduced into the French language document with the aim of harmonizing the texts in the three languages of CEN and of simplifying the wording. It does not in any way define a particular or supplementary category of lift.

3.1.22
lift machine
(machine) (Triebwerk)
unit including the motor which drives and stops the lift

3.1.23
loop rope
(câble en boucle) (umlaufendes Zugseil)
tensioned traction rope, both ends of which are attached to the carriage of the vehicle

3.1.24
machine room
(local de machines) (Triebwerksraum)
room in which a machine or machines and/or the associated equipment are placed

3.1.25
machinery
(machinerie) (Triebwerk und Steuerung)
equipment traditionally placed in the machine room: cabinet(s) for control and drive system

Note 1 to entry: This includes the lift machine, main switch(es) and means for emergency operations.

3.1.26
machinery space
(emplacement de machinerie) (Aufstellungsort von Triebwerk und Steuerung)
space(s) inside or outside of the well where the machinery as a whole or in parts is placed

3.1.27
minimum breaking load of a rope
(charge de rupture minimale d'un câble) (Mindestbruchkraft eines Seiles)
product of the square of the nominal diameter of the rope (in square millimetres) and the nominal tensile strength of the wires (in newtons per square millimetre) and a coefficient appropriate to the type of rope construction

3.1.28
overspeed governor
(limiteur de vitesse) (Geschwindigkeitsbegrenzer)
device which, when the lift attains a predetermined speed, causes the lift to stop, and if necessary causes the safety gear to be applied

3.1.29
passenger
(passager) (Fahrgast)
person transported by a lift in the car

3.1.30
pit
(cuvette) (Schachtgrube)
part of the well at its bottom end

3.1.31
positive drive lift (includes drum drive)
(ascenseur à treuil attelé) (Trommelaufzug, Kettenaufzug)
lift suspended by chains or ropes driven by means other than friction

3.1.32
programmable electronic system in safety related applications for lifts
PESSRAL
(système électronique programmable dans les applications liées à la sécurité des ascenseurs (PESSRAL))
(programmierbares elektronisches System in sicherheitstechnisch relevanten Anwendungen für Aufzüge (Pessral))
system for control, protection or monitoring based on one or more programmable electronic devices, including all elements of the system such as power supplies, sensors and other input devices, data highways and other communication paths, and actuators and other output devices, used in safety related applications as listed in Tables A.1 and A.2

3.1.33
progressive safety gear
(parachute à prise amortie) (Bremsfangvorrichtung)
safety gear in which retardation is effected by a braking action on the guide rails and for which special provisions are made so as to limit the forces on the vehicle, counterweight or balancing weight to a permissible value

3.1.34
pulley room
(local de poulies) (Rollenraum)
room not containing the machine, in which pulleys are located, and in which the overspeed governor and the electrical equipment can also be housed

3.1.35
pulley space
(emplacement de poulies) (Aufstellungsort von Seilrollen)
space(s) inside or outside of the well where pulleys are placed

3.1.36
rated load
(charge nominale) (Nennlast)
load for which the equipment has been built

3.1.37
rated speed
(vitesse nominale) (Nenngeschwindigkeit)
speed v in metres per second of the vehicle for which the equipment has been built

3.1.38
re-levelling
(isonivelage) (Nachstellen)
operation, after the lift has stopped, to permit the stopping position to be corrected during loading or unloading, if necessary by successive movements (automatic or inching)

3.1.39
running/sliding element
(élément de roulement/glissement) (Lauf-/Gleitkörper)
element that ensures contact between the vehicle and the running tracks and between the vehicle and the guide rails

3.1.40
running track
(piste de roulement) (Laufbahn)
rigid element that the vehicle or counterweight runs along

3.1.41
safety integrity level
SIL
(niveau d'intégrité de sécurité) (Sicherheits-Integritätslevel)
discrete level (one out of a possible three) for specifying the safety integrity requirements of the safety functions allocated to the programmable electronic safety-related system, in which Safety-Integrity Level 3 has the highest level of safety integrity and Safety-Integrity Level 1 has the lowest

3.1.42
safety gear
(parachute) (Fangvorrichtung)
mechanical device for stopping, and maintaining stationary on the guide rails, the vehicle, counterweight or balancing weight in case of overspeeding or breaking of the suspension

3.1.43
safety gear gripping element
(élément de prise de parachute) (Fangschiene)
structure that the safety gear grips onto

3.1.44
safety rope
(câble de sécurité) (Sicherheitsseil)
auxiliary rope attached to the vehicle, the counterweight or balancing weight for the purpose of tripping a safety gear in case of suspension failure

3.1.45
sling
(étrier) (Rahmen)
metal framework carrying the car, counterweight or balancing weight, connected to the means of suspension

Note 1 to entry: This sling can be integral with the car enclosure.

3.1.46
side-mounted door
(porte latérale) (Seitentür)
door whose plane is parallel to the travel path of the vehicle

3.1.47
stopping accuracy
(precision d'arrêt) (Anhaltegenauigkeit)
vertical distance between car sill and landing sill at the moment when the vehicle is stopped by the control system at its destination floor and the doors reach their fully open position

3.1.48
system reaction time
(temps de réaction système) (Systemreaktionszeit)
sum of the following two values:

a) time period between the occurrence of a fault in the PESSRAL and the initiation of the corresponding action on the lift;

b) time period for the lift to respond to the action, maintaining a safe state

3.1.49
traction drive lift
(ascenseur à adhérence) (Treibscheiben-Aufzug)
lift whose lifting ropes are driven by friction in the grooves of the driving sheave of the machine

3.1.50
travelling cable
(câble pendentif) (Hängekabel)
flexible cable between the vehicle and a fixed point

3.1.51
unintended vehicle movement
(mouvement incontrôlé du véhicule) (unbeabsichtigte Bewegung des Fahrkorbs)
non-commanded movement of the vehicle with doors open within the unlocking zone away from the landing, excluding movements resulting from loading/unloading operation

3.1.52
unlocking zone
(zone de déverrouillage) (Entriegelungszone)
zone, extending above and below the stopping level, in which the car floor enables the corresponding landing door to be unlocked

3.1.53
user
(usager) (Benutzer)
person making use of the services of a lift installation

3.1.54
vehicle
(véhicule) (Laufwagen)
car, including the sling/carriage and the working station if required

3.1.55
well
(gaine) (Schacht)
space in which the vehicle, the counterweight or the balancing weight travels and which is usually bounded by the bottom of the pit, the walls and the ceiling of the well

3.1.56
working station
(poste de travail) (Arbeitsstation)
specific arranged area either on the car roof, on an inspection platform, or inside the car for maintenance operations

3.2 Symbols and abbreviated terms

3.2.1 Symbols

Symbols are explained relevant to the formulae used.

3.2.2 Abbreviated terms

The abbreviated terms used are chosen from the International System of units (SI).

4 List of significant hazards

4.1 General

This clause contains all the significant hazards, hazardous situations and events, as far as they are dealt with in this standard, identified by risk assessment as significant for this type of machinery and which require action to eliminate or reduce the risk.

The significant hazards are based upon EN ISO 12100:2010. Also shown are the subclause references to the safety requirements and/or protective measures in this standard.

Before using this standard it is important to carry out risk assessment of the lift with an inclined travel path to check that its hazards have been identified in this clause.

Table 1 — List of significant hazards

No	**Hazards as listed in Annex B of** EN ISO 12100:2010	**Relevant clauses in that standard**
1	**Mechanical hazards** due to:	
	Acceleration, deceleration (kinetic energy)	5.6.3, 5.6.8.4, 5.6.10, 5.6.11, 5.7.2.1, 5.7.4, 5.9.4, 5.9.13, F.2, F.4, F.5.4.3
	Approach of a moving element to a fixed part	5.2, 5.3, 5.7.1.1
	Falling objects, gravity	5.2, 5.3.3.5, 5.3.7.1.5
	Height from the ground	5.3.2, 5.5.6, 5.5.13, 5.6
	Moving elements	5.2, 5.4, 5.5, 5.6
	Rotating elements	5.3.3.3.3, 5.3.4.2, 5.6.7, 5.6.9, 5.9.2.1, 5.9.11
	Rough, slippery surface	5.3.7.1, 5.5.3.4, 5.5.13, 7.4.1 a), Annex P
	Sharp edges	Introduction, 5.5.3.1, 5.10.5.3
	Stability	See 0.4
	Strength	See 0.4
	- Machine parts or work pieces, e.g.: - Accumulation of energy inside the machinery, e.g.:	
	Crushing hazard	5.2, 5.4, 5.8.1, 5.8.2
	Shearing hazard	5.2, 5.4.5, 5.4.7.2, 5.5.7.1, 5.8
	Entanglement hazard	5.3, 5.6.7
	Drawing-in or trapping hazard	5.2.1, 5.2.10, 5.4.1, 5.4.7, 5.5.12, 5.5.17, 5.6.3, 5.6.7, 5.7.2.2, 5.11.2.3, 7.2.2.2, 7.2.8.2
	Impact hazard	Introduction, 5.2, 5.3.3, 5.5.20, 5.5.21, 5.6, 5.7, 5.8.3
	Slip, trip and fall of persons (related to machinery)	5.2.11, 5.4, 5.5.3.2, 5.5.3.4, 5.5.13, 5.6.8.7, 7.2.5
	- Uncontrolled amplitude of movements	5.9, 5.11
	- From insufficient mechanical strength of parts	See 0.4, 5.2.3, 5.2.7, 5.3.2, 5.4.5, 5.4.7.3.2, 5.7, Annex G, Annex J
	- From inadequate design of pulleys, drums	5.6.2, 5.6.4, Annex C
	- Falling of person from the vehicle	5.4, 5.5.4, 5.5.13, 5.5.14
2	**Electrical hazards**	
	Arc, electrostatic phenomena	5.10.2
	Live parts	5.10.1, 7.2.5.2
	Overload	5.10.3, 7.2.2.1
	Parts which have become short-circuit	5.10.1, 5.10.2, 5.10.5
	Live under faulty conditions	5.10
3	**Thermal hazards**	
	Flame	5.2.2.2.2, 5.4.2.2, 5.5.3.3
	Objects or materials with a high or low temperature	0.4, 5.3.3.1, 5.10.3

4	**Hazards generated by vibration**	5.10.5.1.4, F.5.4.2
5	**Hazards generated by radiation**	
	Low frequency electromagnetic radiation	5.10.1.1.3
	Radio frequency electromagnetic radiation	5.10.1.1.3, Annex O
6	**Hazards generated by materials and substances**	
	Combustible	5.5.3.3, 5.9.4.2.7
	Explosive	1.2, Annex O
	Fluid	5.7.4.3.5
	Fume	1.4, 5.2.2, 5.3, 5.4.2.2, 5.5.3.3, 5.5.16, N.3.2
7	**Hazards generated by neglecting ergonomic principles in machinery design** as, e.g. hazards from:	
	Access	0.4, 5.2.2.4, 5.2.7.4.2, 5.2.11, 5.3.3.3.2, 5.3.3.4, 5.3.4.3, 5.3.4.5, 5.3.4.6, 5.3.5, 5.4, 5.5.3.1, 5.6.9.6, 5.9.5, 5.10.4.4, 7.2, 7.4.1
	Inadequate local lighting	5.2.7.4, 5.2.9, 5.3.4.8, 5.3.6.3, 5.3.7.1.8, 5.4.6.1, 5.5.17, 5.10.5.5, 5.10.5.6
	Unhealthy postures	5.2.7, 5.3
	Human error, human behaviour	7.2.5.6, 7.2.6, 7.2.7, 5.11.2.1.4.3
	From abnormal conditions of assembly / testing / use / maintenance	6.1, 6.2, 7.1, 7.3.1, 7.3.2, Annex C, D.3
	Design or location of indicators and visual displays units	5.3, 5.4, 7.2.5.5, 7.2.5.6, 7.2.5.9, 7.2.8.1
	Design, location or identification of control devices	5.11.2, 5.5.15, 5.5.17, 7.2.5, 7.2.6, 7.2.7
	Effort	0.4, 5.2.1, 5.2.2.4, 5.3.4.9, 5.4.8, 5.5.7, 5.5.10, 5.5.13, 5.9.5
	Visibility	5.2, 5.11.2.4.3, 5.11.2.5.3 a), 7.2, Annex O
8	**Hazards associated with the environment in which the machine is used**	
	Failure of the power supply	5.9.4.1, 5.11.1, 5.11.2
	Failure of the control circuit	5.6.11, 5.9.4.1, 5.9.7, 5.10.2, 5.11, Annex F
	Unexpected start-up, unexpected overrun / overspeed (or any similar malfunction) from restoration of energy supply after an interruption	5.6.11, 5.11
	Dust and fog	5.3, N.3.2, Annex O
	Electromagnetic disturbance	5.10.1, Annex O
	Moisture	5.3.1, 5.4.7.3.2.3, G.2.1.1.1, Annex H, Annex N, Annex O
	Snow	5.2.2.3, 5.2.3.1, 5.5.21, Annex G, Annex N, Annex O
	Temperature	Introduction, 5.3.7.1, 5.4.2.2, 5.4.2.2, 5.5.16, 5.10.3.3, F.2, Annex G, Annex H, Annex N
	Water	5.2.7.4, 5.4.4.1, Annex O
	Wind	5.2.2, 5.2.3.1, Annex G, Annex N, Annex O

5 Safety requirements and/or protective measures

5.1 General provisions

Inclined lifts shall comply with the safety requirements and/or protective measures of this clause. In addition, the machine shall be designed according to the principles of EN ISO 12100 for relevant but not significant hazards, which are not dealt with by this document.

5.2 Lift well

5.2.1 General provisions

5.2.1.1 The requirements of this clause relate to wells containing one or more lift vehicles.

5.2.1.2 The counterweight or the balancing weight of a lift shall be in the same well as the vehicle.

5.2.1.3 The minimum dimensions of the well section are those of the dynamic envelope plus landing doors augmented on the sides and above the vehicle with a clearance required for safe operation.

5.2.2 Well enclosure

5.2.2.1 General

A lift shall be separated from the surroundings by:

a) walls, floor and ceiling, or

b) sufficient space.

5.2.2.2 Totally enclosed well

5.2.2.2.1 Building installation

In sections of the building where the well is required to contribute against the spread of fire, the well shall be totally enclosed by imperforate walls, floor and ceiling.

The only permissible openings are:

a) openings for landing doors;

b) openings for inspection and emergency doors to the well and inspection traps;

c) vent openings for escape of gases and smoke in the event of fire;

d) ventilation openings;

e) necessary openings for the functioning of the lift between the well and the machine or pulley rooms;

f) openings in partition between lifts according to 5.2.6.

5.2.2.2.2 Tunnel installation

Lifts with inclined travel path running in tunnels of length greater than 300 m or where the evacuation zones are more than 300 m apart should be designed, built, maintained and operated by taking into account the objectives defined by CEN/TR 14819-1:2004, 4.2 [2].

5.2.2.3 Partially enclosed well

5.2.2.3.1 Introduction

In those parts of the building where the well is not required to contribute against the spread of fire, e.g. observation lifts in connection with galleries or atriums or garden lifts the well does not need to be totally enclosed, provided 5.2.2.3.2 to 5.2.2.3.4 are fulfilled as appropriate.

5.2.2.3.2 General

The following requirements apply:

a) The height of the enclosure at places normally accessible to persons shall be sufficient to prevent such persons from:

   1) being endangered by moving parts of the lift with inclined travel path, and

   2) interfering with the safe operation of the lift by reaching a part of the lift located inside the well either directly or with hand-held objects.

b) Perforated enclosure walls are permitted as long as they comply with EN ISO 13857:2008, Table 5, regarding mesh size.

c) The enclosure shall be located within 0,15 m maximum of the edges of floors, stairs or platforms.

d) Measures are to be taken to prevent interference with the safe operation of the lift by other aspects relating to the location of the equipment (see Introduction, 0.4 d), 5.2.8 b) and 7.4.1 b)).

   A specific analysis of particular risks is necessary in order to define the safety devices needed (see Annex O).

e) Special precautions shall be taken for lifts exposed to bad weather conditions (see Introduction and Scope), especially snowfall and wind.

5.2.2.3.3 Lifts with an inclination of more than 45°

The height of the enclosure is assumed to be sufficient if it is in conformity with Figure 2, that means:

a) minimum 3,50 m at a landing door side;

b) minimum 2,50 m at other sides and with a minimum horizontal distance of 0,50 m to moving parts of the lift.

   If the distance to moving parts exceeds 0,50 m, the value of 2,50 m can be reduced progressively to a minimum height of 1,10 m in a distance of 2,00 m.

5.2.2.3.4 Lifts with an inclination not exceeding 45°

The height H of the enclosure shall be:

a) at landings side at least the height of the travelling area of the vehicle;

b) for the other sides, the following formula is applied:

$$H + D \geq 2{,}50 \text{ m} \qquad \text{with} \qquad H \geq 1{,}80 \text{ m}$$

where

D is the horizontal distance between the wall and the moving parts of the lift (see Figure 2).

In the inclined portion of the well, H is measured vertically.

The height H may be lowered to 1,10 m in relation to the design and use conditions, taking account the environment (Safety rules relating to the sizes of safe-guards) (see Figure 2). Furthermore, this protection shall be ensured for all normally predictable situations (snow in particular).

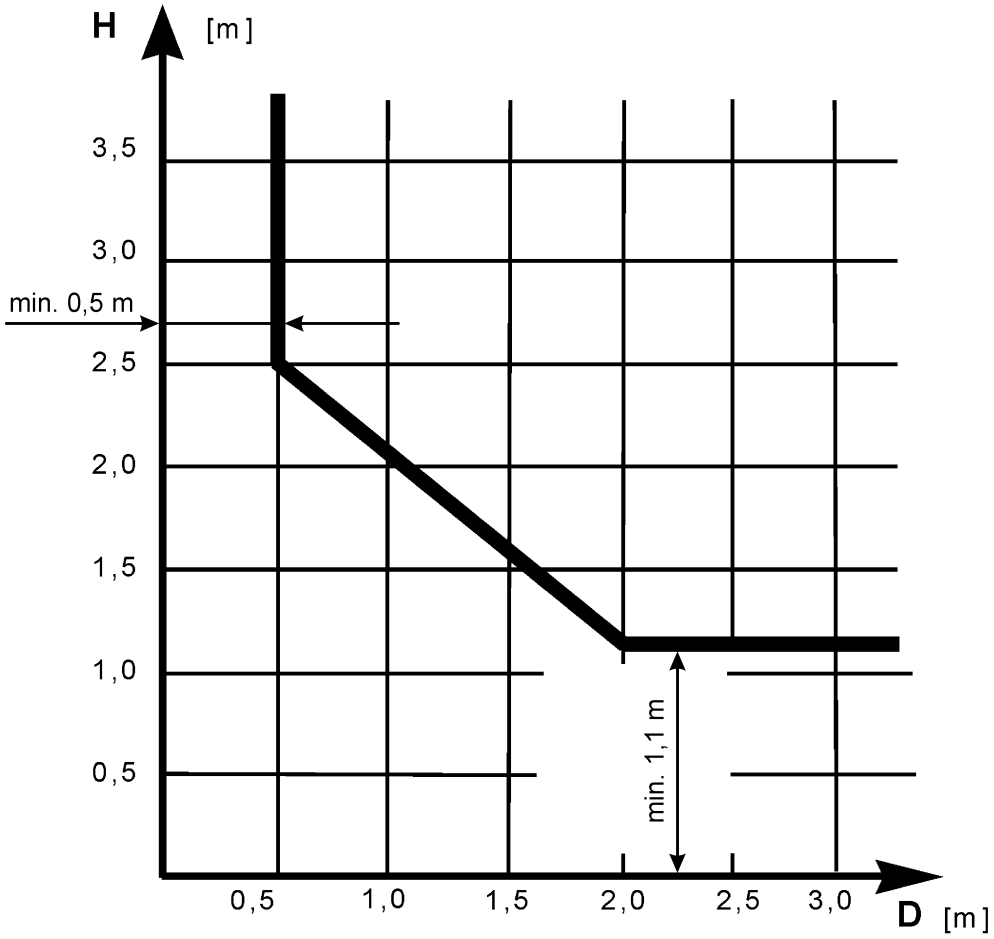

Figure 2 — Lift in a partially enclosed well – Distances

5.2.2.4 Inspection and emergency doors - Inspection traps

5.2.2.4.1 General

5.2.2.4.1.1 Inspection and emergency doors, and inspection traps to the well, shall not be used except on grounds of safety to users or the requirements of maintenance.

5.2.2.4.1.2 Inspection doors shall have a minimum height of 1,40 m and a minimum width of 0,60 m.

Emergency doors shall have a minimum height of 1,80 m and a minimum width of 0,35 m.

Inspection traps shall have a maximum height of 0,50 m and a maximum width of 0,50 m.

5.2.2.4.2 Emergency and inspection accesses

5.2.2.4.2.1 For emergency access or inspection access to the well, one of the following requirements shall be applied as appropriate:

a) emergency doors with a distance between landing doorsills in accordance with the means used; if a ladder is used the distance shall not exceed 11 m, measured according to the inclination;

b) a permanent walkway with a minimum width of 0,50 m and a minimum step width of 0,35 m or a permanent ladder according to EN 131-2:2010+A1:2012; these can be used safely under all circumstances from one end of the well to the other and shall comprise the following:

   1) for vertical distances between the door sill and the walkway exceeding 0,50 m, steps or a ladder affording access to the car from the inside of the well; if the steps or ladders are removable they shall be stored immediately nearby the lift and be available at all times;

   2) trap doors affording access to the well shall be compliant with 5.2.2.4.1.2; if well access is via landing doors, steps or ladders leading to the service walkway shall be provided;

c) adjacent vehicle equipped with an emergency exit compliant with the requirements of 5.5.12;

d) external means allowing direct access to the car without danger (e.g. by mobile elevating work platform);

e) a combination of some foregoing solutions.

5.2.2.4.2.2 Inspection and emergency doors and inspection traps shall not open towards the interior of the well.

5.2.2.4.2.3 The doors and traps shall be provided with a key-operated lock, capable of being reclosed and relocked without a key.

5.2.2.4.2.4 Inspection and emergency doors shall be capable of being opened from inside the well without a key even when locked.

5.2.2.4.2.5 Operation of the lift shall automatically depend on maintaining these doors and traps in the closed position. For this purpose electric safety devices in conformity with 5.11.1.2 shall be employed.

An electric safety device is not required in case of access door(s) to the pit (5.2.7.4.2) provided the door(s) does not give access to a hazardous zone.

The presence of travelling cables, compensating ropes and their equipment, tensioning pulleys for the overspeed governor and similar installations is not regarded as being hazardous.

5.2.2.4.2.6 Inspection and emergency doors and inspection traps shall be imperforate, satisfy the same requirements for mechanical strength as the landing doors, and comply with the regulations relevant to the fire protection for the building concerned.

5.2.2.5 Ventilation of the well

The well shall be suitably ventilated (see N.3.2 for information). It shall not be used to provide ventilation of rooms other than those belonging to the lift.

In the absence of relevant regulations or standards, it is recommended that ventilation openings at the top of the well, with a minimum area of 1 % of the horizontal section of the well, are provided.

5.2.3 Walls, floor, ceilings

5.2.3.1 General

The structure of the well shall be able to support at least the loads that may be applied by the machine, by the guiding elements, by the supporting elements and the safety gear operation rail element at the moment of safety gear operation or in the case of eccentric load in the car, by the action of the buffers, by those which

may be applied by the anti-rebound device, or by any other source of foreseeable strain caused by the immediate environment: such as the effect of wind or snowfall.

5.2.3.2 Strength of the walls

5.2.3.2.1 For the safe operation of the lift the walls shall have a mechanical strength such that when a force of 300 N, being evenly distributed over an area of 5 cm^2 in round or square section, is applied at right angles to the wall at any point on either face they shall:

a) resist without permanent deformation ;

b) resist without elastic deformation greater than 15 mm.

See also 5.2.4.

5.2.3.2.2 Glass panels, plane or formed, placed at points normally accessible to persons shall be made of laminated glass up to a height as required in 5.2.2.3.

5.2.3.3 Strength of the pit floor

5.2.3.3.1 If the safety gear gripping element is not suspended, the pit floor shall be able to bear the relevant components of the force due to the mass of this element plus the reaction force at the moment of the operation of the safety gear.

5.2.3.3.2 Engineering civil works shall be able to support in the direction of the travel, beneath the vehicle buffers supports, the maximum dynamic load due to the shock of the vehicle on the buffers with a safety factor of 2.

The maximum speed is 115 % of the rated speed as defined in 5.7.4.

5.2.3.3.3 The floor of the pit shall be able to support beneath the counterweight buffer supports or the balancing weight travelling area, the dynamic load being due to the mass of the counterweight or the balancing weight with a safety factor of 2.

The maximum speed is 115 % of the rated speed as defined in 5.7.4.

5.2.3.4 Strength of the ceiling

Notwithstanding the requirements of 5.2.3.2 and/or 5.3.7.1.2 in the case of hanging guide rails or hanging safety gear gripping elements the suspension points shall be able to take at least the loads and forces according to G.3.

5.2.3.5 Structure

Structures carrying the running tracks, the guide rails and the element of the safety gear operation rail shall be designed according to the rules of construction, and taking into account the functionality of the lift as well as the specificity of the site.

All the predictable movements of supports shall be taken into account to ensure a safe operation of the lift.

Annex G provides all the information for building structure by calculation.

5.2.4 Construction of the walls of lift wells and landing doors facing a car entrance

5.2.4.1 The following requirements relating to landing doors and walls, or parts of walls, facing a car entrance shall apply over the full height of the well.

For clearances between car and wall of the lift well facing the car entrance, see 5.8.

5.2.4.2 At each landing, the assembly comprising the landing doors and any wall or part of a wall facing the car entrance shall form an imperforate surface over the full entrance width of the car, excluding the operational clearances of doors.

Furthermore, the walls located around the entrance of the landing shall present a flat continuous surface parallel to the trajectory.

This surface shall be composed of smooth and hard elements according to 5.2.4.3.

The lift car position to be taken into account in reference to the theoretical stopping position includes all the unlocking zone plus for the following cases:

a) Side-mounted doors: 50 mm on both sides;

b) Front-mounted doors: 25 mm on both sides.

5.2.4.3 Below each landing doorsill, the apron of the lift well shall comply with the following requirements:

a) it shall form a surface which is directly connected to the landing door sill, whose dimension covers the entire opening under the sill when moving in the unlocking zone plus 50 mm on each side and below,

b) this surface shall be continuous and composed of smooth and hard elements, such as metal sheets, and shall be capable of withstanding a force of 300 N applied at a right angle to the wall at any point, being evenly distributed over an area of 5 cm^2 in round or square section, it shall resist:

   1) without permanent deformation;

   2) without elastic deformation greater than 10 mm.

5.2.5 Protection of any spaces located in the vehicle trajectory, the counterweight or the balancing weight at the lowest level

If accessible spaces do exist in the vehicle trajectory, counterweight or the balancing weight, the base of the pit or the lower wall end shall be designed for an imposed load of at least 5 000 N/m^2, and:

a) either there shall be installed below the counterweight buffers, a solid pier extending down to solid ground and according to the lift inclination, or

b) the counterweight or the balancing weight shall be equipped with safety gear.

5.2.6 Protection in the well

5.2.6.1 General provisions

5.2.6.1.1 In the usual zones of maintenance (defined in the instruction manual), the travelling area of counterweight or the balancing weight shall be guarded by a rigid screen on all the accessible faces.

The width shall be at least equal to the area of risk. If this partition is perforate, EN ISO 13857:2008, Table 4, shall be respected.

However, this provision need not apply if, at the opening of the doors accessing to the well, the lift is automatically stopped by a safety device according to 5.2.2.4.2.5.

The restarting of the lift shall only happen after a voluntary resetting made by a competent person.

5.2.6.1.2 If it is intended to access the car roof for maintenance or inspection work, the free vertical distance of at least 2,00 m shall be reserved above the car roof along the normal travel path. This distance is measured at a right angle to the floor of the working station where the free distance is the lowest.

5.2.6.2 Several lifts in the well

5.2.6.2.1 Where the well contains several lifts there shall be a partition between the moving parts of different lifts.

If this partition is perforate, EN ISO 13857:2008, Table 4, shall be respected.

5.2.6.2.2 This partition shall extend at least from the lowest point of the travel of the vehicle, the counterweight or the balancing weight to a height of 2,50 m above the floor of the lowest landing.

The width shall be as to prevent access from one pit to another, except where the conditions of 5.2.2.4.2.5 are met.

5.2.6.2.3 The partition shall extend through the full travel of the moving parts if the horizontal distance between the edge of the car roof and a moving part (car, counterweight or balancing weight) of an adjacent carrier is less than 0,50 m.

The dimensions of the partition shall at least cover all moving parts, or part of this, which is to be guarded, plus 0,10 m on each side.

5.2.6.2.4 When it is possible to walk inside the well (5.2.2.4.2.1 b)) a separation shall be provided along the well between the adjacent lifts with a height H such that:

$H + D \geq 2{,}50$ m with $H \geq 1{,}10$ m,

where

D is the horizontal distance measured between the most exposed side of the walkway and the closest wall of the vehicle (or the counterweight) of the adjacent lift.

In the inclined portion of the well, H is measured at a right angle to the inclination.

If this separation is perforated, openings shall be compliant with the requirements of EN ISO 13857:2008 relating to the protection of persons.

However, this provision need not apply if, at the opening of the doors accessing the well, all the lifts are automatically stopped by a safety device according to 5.2.2.4.2.5.

The re-starting of the lifts can only be carried out after a voluntary reset made by a competent person from outside the well.

5.2.7 Headroom and pit

5.2.7.1 General

If it is intended to carry out maintenance or inspection work in the headroom or in the pit, safety volumes shall be made available under the worst conditions as given in 5.2.7.2 and 5.2.7.3.

The available safety volume shall be provided for the over travel.

5.2.7.2 Access to the headroom through the car roof

5.2.7.2.1 Top clearances for traction drive lifts

5.2.7.2.1.1 Vehicle at its limit of travel

The limit of travel of the vehicle shall be provided by the compressed buffers of the counterweight or by compressed buffers specific for the vehicle.

When the vehicle reaches the limit of its travel, the following four conditions shall be satisfied at the same time:

a) the vehicle guide rail lengths shall be such as would accommodate a further guided travel, expressed in metres, of at least 0,1 + 0,035 $v^2/\sin\alpha$ [4)], or the vehicle shall be guided until the specific buffers are fully compressed;

b) the free vertical distance between the level of the highest area on the car roof whose dimensions comply with 5.5.13.2.2 (areas on parts according to 5.2.7.2.1.1.c) excluded) and the level of the lowest part of the ceiling of the well (including beams and components located under the ceiling) situated in the projection of the car, expressed in metres, shall be at least 1,0 + 0,035 $v^2/\sin\alpha$;

c) the free vertical distance, expressed in metres, between the lowest parts of the ceiling of the well and:

   1) the highest pieces of equipment fixed on the roof of the car enclosure, except for those covered in 2) below, shall be at least 0,3 + 0,035 $v^2/\sin\alpha$;

   2) the highest part of the guide shoes or rollers, of the rope attachments and of the header or parts of vertically sliding doors, if any, shall be at least 0,1 + 0,035 $v^2/\sin\alpha$;

d) there shall be above the car sufficient space to accommodate a rectangular block not less than 0,50 m x 0,60 m x 0,80 m resting on one of its faces. For lifts with direct roping, the suspension ropes and their attachments may be included in this space, provided that no rope centre-line shall be at a distance exceeding 0,15 m from at least one vertical surface of the block.

5.2.7.2.1.2 Counterweight at its limit of travel

The limit of travel of the counterweight shall be provided by the compressed buffers of the vehicle or by compressed buffers specific for the counterweight.

When the counterweight reaches the limit of its travel, the counterweight guide rail lengths shall be such as would accommodate a further guided travel, expressed in metres, of at least 0,1 + 0,035 $v^2/\sin\alpha$, or the counterweight shall be guided until the specific buffers are fully compressed.

5.2.7.2.1.3 Reduced clearances

When the slowdown of the machine is monitored, in accordance with 5.9.8, the value of 0,035 $v^2/\sin\alpha$ in 5.2.7.2.1.1 and 5.2.7.2.1.2 for calculation of clearances may be reduced to one half; however, this value shall not be less than 0,25 m.

---

4) 0,035 $v^2/\sin\alpha$ represents half the gravity stopping distance corresponding to 115 % of the rated speed:

$$1/2 \cdot \frac{(1{,}15v)^2}{2 \cdot g_n} 0{,}0337\,v^2 \text{ rounded to } 0{,}035\,v^2$$

For lifts which are fitted with compensating ropes having a tensioning pulley equipped with an anti-rebound device (braking or lock-down device), the value of 0,035 v^2 may be replaced in the calculation of the clearances by a figure related to the possible travel of that pulley (depending on the roping used) plus 1/500 of the travel of the car, with a minimum of 0,20 m to take account of the elasticity of the ropes.

5.2.7.2.2 Top clearances for positive drive lifts

5.2.7.2.2.1 The guided travel of the vehicle upwards from the top floor until it strikes the upper buffers shall be at least 0,50 m along the inclined travel path. The vehicle shall be guided to the limit of its buffer stroke.

5.2.7.2.2.2 When the upper buffers are fully compressed by the vehicle, the following three conditions shall be satisfied at the same time:

a) the free vertical distance between the level of the highest area on the car roof whose dimensions comply with 5.5.13.2.2 (areas on parts according to 5.2.7.2.2.2 b) excluded) and the level of the lowest part of the ceiling of the well (including beams and components located under the ceiling) situated in the projection of the car, shall be at least 1 m;

b) the free vertical distance between the lowest part of the ceiling of the well and:

   1) the highest pieces of equipment fixed on the car roof, except for those covered by 2) below, shall be at least 0,30 m;

   2) the highest part of the guide shoes or rollers, of the rope attachments, or of the header, or the parts of vertically sliding doors, if any, shall be at least 0,10 m;

c) there shall be above the car roof sufficient space to accommodate a rectangular block not less than 0,50 m x 0,60 m x 0,80 m resting on one of its faces. For lifts with direct roping, the suspension ropes or chains and their attachments may be included in this space, provided that no rope, or chain, centre-line shall be at a distance exceeding 0,15 m from at least one vertical surface of the block.

5.2.7.2.2.3 When the vehicle rests on its fully compressed buffers, the guide rail lengths of the balancing weight, if there is one, shall be such as would accommodate a further guided travel of at least 0,30 m.

5.2.7.3 Access to the headroom through the well

If, because of the inclination access to the top of well may be made other than by the roof of the vehicle, the horizontal measured distance between the most advanced part of the vehicle and the extremity of the well shall be at least 0,50 m by taking into consideration e.g. the inclination, friction and the gravity distance of the vehicle. In this case the height of the safety volume shall be at least 2,00 m.

5.2.7.4 Pit

5.2.7.4.1 The lower part of the well shall consist of a pit, the bottom of which shall be smooth and approximately level, except for any buffer and guide rail bases and water drainage devices.

After the building-in of guide rail fixings, buffers, any grids, etc., the pit shall be impervious to infiltration of water.

When a lift is installed outdoors means shall be provided to ensure the removal of any water from the pit in all cases.

5.2.7.4.2 If there is an access door to the pit, other than the landing door, it shall comply with the requirements of 5.2.2.4. Such a door shall be provided if the pit depth exceeds 2,50 m and if the layout of the building so permits.

If there is no other access a permanent means shall be provided inside the well, easily accessible from the landing door, to permit competent persons to descend safely to the floor of the pit. This shall not project into the clear running space of the lift equipment.

5.2.7.4.3 When the vehicle rests on its fully compressed buffers, the following three conditions shall be satisfied at the same time:

a) there shall be in the pit sufficient space to accommodate a rectangular block not less than 0,50 m x 0,60 m x 1,0 m resting on one of its faces;

b) the free distance measured between the rear well of the pit and the most rear part of the vehicle, shall be at least 0,50 m. This distance may be reduced to a minimum of 0,10 m within a horizontal distance of 0,15 m between the most rear parts of the car and the guide rails;

c) the free distance measured in the direction of travel between the most rear part of the vehicle and the first fixed possible collision point shall be at least 0,30 m

5.2.7.4.4 There shall be in the pit:

a) a stopping device(s) accessible on opening the door(s) to the pit, and from the pit floor, in conformity with the requirements of 5.11.2.2;

b) a socket outlet (5.10.5.5.2) ;

c) means to switch the lift well lighting (5.2.9), accessible on opening the door(s) to the pit.

5.2.7.5 Lifts with front mounted doors

5.2.7.2.1.1 and 5.2.7.4.3 do not apply.

The safety area for works at the upper and the lower end of the travel path shall be obtained by a safety stopping of the vehicle in accordance with 5.3.4.4.

For positive drive lifts or lifts with a loop rope without counterweight, only the protection against a downwards movement is needed.

5.2.8 Exclusive use of the well

The well shall be exclusively used for the lift. It shall not contain cables or devices, etc., other than for the lift. The well may, however, contain heating equipment for the lift well excluding steam heating and high pressure water heating. However, any control and adjustment devices of the heating apparatus shall be located outside the well.

In the case of lifts according to 5.2.2.3, it is regarded as “well” in the case where enclosures:

a) are present: the area inside the enclosure;

b) are missing: the area being inside a horizontal distance of 1,50 m from movable components of the lift (see 5.2.2.3.2 d)).

5.2.9 Lighting of the well

If a compartment of the vehicle (for example the roof) is accessible for the maintenance operations, the well shall be provided with permanently installed electric lighting, giving an intensity of illumination of at least 50 lx, 1,00 m above the compartment and the pit floor, even when all doors are closed.

This lighting shall comprise intermediate lamps and one lamp at lower than 0,50 m from the top and the bottom of the well.

If the well is not totally closed as detailed in 5.2.2.3, this lighting is not necessary if the electric lighting existing in the neighbourhood of the well is sufficient in order to satisfy the requirement above.

When a walkway is provided in the well according to 5.2.2.4.2.1 b):

a) the well shall be provided with permanently installed electric lighting, giving an intensity of illumination of at least 50 lx, at the walkway;

b) there shall be emergency lightings along the walkway so that the walkway and the access doors have a beacon lighting in case of absence of the main energy;

c) in case of blackout this lighting shall be sufficient for the complete evacuation of the site (maintenance and/or inspection personnel, trapped passengers).

For maintenance purposes the lift well lighting shall be a minimum of 50 lx.

5.2.10 Emergency release

If no means to escape are provided for person trapped in the well, additional alarm initiation devices to the alarm system according to EN 81-28:2003 shall be installed at places where the risk of trapping exists.

5.2.11 Access to the well through a landing door

If the access into the lift well is at least a landing door, the following devices shall be accessible from the landing when the door is open:

a) a switch for the lighting of the well (see 5.10.5.6.2);

b) a stopping device according to 5.11.2.2.1.

5.2.12 Protection of the areas under the running track

If persons can gain access under the running tracks of the lift, a protection screen shall be provided in order to receive and to retain any piece or component ejected from the lift.

5.3 Machine, working areas and pulley spaces

5.3.1 General provisions

Machinery and pulleys shall be located in machinery and pulley spaces. These spaces and the associated working areas shall be accessible. Provisions shall be made to allow access to the spaces only to authorized persons (maintenance, inspection and rescue). The spaces and the associated working areas shall be suitably protected against environmental influences to be taken into consideration and provisions made for suitable areas for maintenance/inspection work and emergency operation (see Introduction - Principles).

5.3.2 Access

5.3.2.1 The access way adjacent to any door/trap giving access to machinery and pulley spaces shall be:

a) capable of being properly lit by a permanent electric light fixture(s);

b) easy to use in complete safety in all circumstances without necessitating entry into private premises.

5.3.2.2 A safe access for persons to machinery and pulley spaces shall be provided. For preference this should be effected entirely by way of stairs. If it is not possible to install stairs, ladders satisfying the following requirements shall be used:

a) the access to the machinery and pulley spaces shall not be situated more than 4,00 m above the level accessible by stairs;

b) ladders shall be fastened to the access in such a way that they cannot be removed;

c) ladders exceeding 1,50 m in height shall, when in position for access, form an angle between 65° and 75° to the horizontal and shall not be liable to slip or turn over;

d) the clear width of the ladder shall be at least 0,35 m, the depth of the steps shall not be less than 25 mm and in the case of vertical ladders the distance between the steps and the wall behind the ladder shall not be less than 0,15 m. The steps shall be designed for a load of 1 500 N;

e) adjacent to the top end of the ladder there shall be at least one hand hold within easy reach;

f) around a ladder, within a horizontal distance of 1,50 m, the risk of falling by more than the height of the ladder shall be prevented.

5.3.3 Machinery in machine room

5.3.3.1 General provisions

5.3.3.1.1 When lift machines and their associated equipment are located in a machine room, it shall comprise solid walls, ceiling, floor and door and/or trap.

Machine rooms shall not be used for purposes other than lifts. They shall not contain ducts, cables or devices other than for the lift.

These rooms may, however, contain:

a) machines for service lifts or escalators;

b) equipment for air-conditioning or heating of these rooms, excluding steam heating and high pressure water heating;

c) fire detectors or extinguishers, with a high operating temperature, appropriate for the electrical equipment, stable over a period of time, and suitably protected against accidental impact.

5.3.3.1.2 The traction sheave may be installed in the well, provided that:

a) examinations and the tests and the maintenance operations may be carried out from the machine room;

b) openings between the machine room and the well are as small as possible.

5.3.3.2 Mechanical strength, floor surface

5.3.3.2.1 Machine rooms shall be so constructed to withstand the loads and forces to which they are intended to be subjected.

They shall be in durable material not favouring the creation of dust.

5.3.3.2.2 Room floors shall be of non-slip material, e.g. trowelled concrete or chequer plate.

5.3.3.3 Dimensions

5.3.3.3.1 The dimensions of machine rooms shall be sufficient to permit easy and safe working on equipment, especially the electrical equipment.

In particular there shall be provided at least a clear height of 2,00 m at working areas, and:

a) a clear horizontal area in front of the control panels and cabinets. This area is defined as follows:

   1) depth, measured from the external surface of the enclosures, at least 0,70 m;

   2) width, the greater of the following values: 0,50 m or the full width of the cabinet or panel;

b) a clear horizontal area of at least 0,50 m × 0,60 m for maintenance and inspection of moving parts at points where this is necessary and, if need be, manual emergency operation (5.9.5).

5.3.3.3.2 The clear height for movement shall not be less than 1,80 m.

The access ways to the clear spaces mentioned in 5.3.3.3.1 shall have a width of at least 0,50 m. This value may be reduced to 0,40 m where there are no moving parts.

This clear height for movement is taken to the underside of the structural roof beams and measured from the floor of the access area.

5.3.3.3.3 There shall be a clear vertical distance of at least 0,30 m above the rotating parts of the machine.

5.3.3.3.4 When the machine room floor comprises a number of levels differing by more than 0,50 m, stairways or steps and guardrails shall be provided.

5.3.3.3.5 When the floor of the machine rooms has any recesses greater than 0,50 m deep and less than 0,50 m wide, or any ducts, they shall be covered.

5.3.3.4 Doors and trap doors

5.3.3.4.1 Access doors shall have a minimum width of 0,60 m and a minimum height of 1,80 m. They shall not open towards the inside of the room.

5.3.3.4.2 Access trap doors for persons shall give a clear passage of at least 0,80 m x 0,80 m, and shall be counterbalanced.

All trap doors, when they are closed, shall be able to support two persons, each counting for 1 000 N on an area of 0,20 m × 0,20 m at any position, without permanent deformation.

Trap doors shall not open downwards, unless they are linked to retractable ladders. Hinges, if any, shall be of a type which cannot be unhooked.

When a trap door is in the open position, precautions shall be taken to prevent the fall of persons (e.g. a guardrail).

5.3.3.4.3 Doors or trap doors shall be provided with a key operated lock, capable of being opened without a key from inside the room.

Trap doors used only for access of material may be locked from the inside only.

5.3.3.5 Other openings

The dimension of holes in the slab and room floor shall be reduced to a minimum for their purpose.

With the aim of removing the danger of objects falling through openings situated above the well, including those for electric cables, ferrules shall be used, which project at least 50 mm above the slab or finished floor.

5.3.3.6 Ventilation

The machine rooms shall be suitably ventilated (see N.3.3 for information). Should the well be ventilated through the machine room, this shall be taken into account. Stale air from other parts of the building shall not be extracted directly into the machine room. It shall be such that the motors, and equipment, as well as electric cables, etc., are protected as far as it is reasonably practicable from dust, harmful fumes and humidity.

5.3.3.7 Lighting and socket outlets

The machine room shall be provided with permanently installed electric lighting with an intensity of at least 200 lx at floor level. The supply for this lighting shall be in conformity with 5.10.5.5.1.

A switch placed inside close to the access point(s), at an appropriate height, shall control lighting of the room.

At least one socket outlet (5.10.5.5.2) shall be provided.

5.3.3.8 Handling of equipment

One or more metal supports or hooks with the indication of the safe working load (see 7.2.5.7), as appropriate, are provided in the machine room ceiling or on the beams, conveniently positioned to permit the hoisting of heavy equipment (see Introduction, 0.3, Principles).

5.3.4 Working areas and machinery inside the well

5.3.4.1 General provisions

5.3.4.1.1 Machinery supports and working areas inside the well shall be so constructed to withstand the loads and forces to which they are intended to be subjected.

5.3.4.1.2 In the case of wells partially enclosed at the exterior of buildings the machinery shall be suitably protected against the environmental influences.

5.3.4.1.3 The clear height for moving inside the well from one working area to another one shall not be less than 1,80 m.

5.3.4.2 Dimensions of working areas inside the well

5.3.4.2.1 The dimensions of working areas at the machinery inside the well shall be sufficient to permit easy and safe working on equipment.

In particular there shall be provided at least a clear height of 2,00 m at working areas, and:

a) a clear horizontal working area of at least 0,50 m × 0,60 m for maintenance and inspection of parts at points where this is necessary;

b) a clear horizontal space in front of the control panels and cabinets, defined as follows:

   1) depth, measured from the external surface of the enclosures, at least 0,70 m;

   2) width, the greater of the following values: 0,50 m or the full width of the cabinet or panel.

5.3.4.2.2 There shall be a clear vertical distance of at least 0,30 m above unprotected rotating parts of the machine. If the distance is less than 0,30 m guarding shall be provided according to 5.6.7.1 a).

NOTE See also 5.2.7.2.

5.3.4.3 Working stations in the car or on the car roof

5.3.4.3.1 Where maintenance/inspection work on the machinery is to be carried out from inside the car or from the car roof and if any kind of uncontrolled or unexpected vehicle movement resulting from maintenance/inspection can be dangerous to persons, the following applies:

a) any dangerous movement of the vehicle shall be prevented by a mechanical device;

b) all movement of the vehicle shall be prevented by means of an electric safety device in conformity with 5.11.1.2 unless the mechanical device is in its inactive position;

c) when this device is in its active position, it shall be possible to carry out maintenance work and to leave the working area safely.

5.3.4.3.2 The necessary devices for emergency operation and for dynamic tests (such as brake tests, traction tests, safety gear tests, buffer tests or tests of ascending vehicle overspeed protection means) shall be arranged so that they can be carried out from outside of the well in accordance with 5.3.6.

5.3.4.3.3 If inspection doors and/or traps are located in the walls of the car, they shall:

a) have sufficient dimensions to carry out the required work through the door/trap;

b) be as small as possible to avoid falling into the well;

c) not open towards the outside of the car;

d) be provided with a key-operated lock, capable of being reclosed and relocked without a key;

e) be provided with an electrical safety device in conformity with 5.11.1.2, checking the locked position;

f) be imperforate and satisfy the same requirements for mechanical strength as the walls of the car.

5.3.4.3.4 Where it is necessary to move the vehicle from the inside with open inspection door/trap the following applies:

a) an inspection control station according to 5.11.2.1.4 shall be available near the inspection door/trap;

b) the inspection control station in the car shall render inoperative the electric safety device according to 5.3.4.3.3 e);

c) the inspection control station in the car shall be accessible only to authorized persons and so arranged that it is not possible to use it to drive the vehicle when standing on the car roof, e.g. by placing it behind the inspection door/trap;

d) if the smaller dimension of the opening exceeds 0,20 m the clear horizontal distance between the outside edge of the opening in the car wall and equipment installed in the well in front of that opening shall be at least 0,30 m.

5.3.4.3.5 If the car roof is not used for maintenance operation or rescue operation for the passengers transported, the access to the car roof shall not be permitted. This shall be clearly indicated by a suitable warning sign (see 7.2.6) and also in the instructions manual in conformity with 7.4.1 c).

5.3.4.4 Working areas in the pit and in the headroom of the well

5.3.4.4.1 Where machinery and components are to be maintained or inspected from the pit or from the headroom and if this work requires movement of the vehicle, or is likely to result in uncontrolled or unexpected vehicle movement, the following applies:

a) a permanently installed device shall be provided to mechanically stop the vehicle with any load up to rated load and from any speed up to rated speed to create a free distance of at least 2,00 m between the floor of the working area and the most advanced parts of the vehicle, excluding those mentioned in 5.2.7.4.3.; the retardation of mechanical devices other than safety gears shall not exceed that produced by the buffers (5.7.4);

b) mechanical device shall be able to maintain the vehicle stopped;

c) mechanical device may be operated manually or automatically;

d) where it is necessary to move the vehicle from the pit or from the headroom, an inspection control station according to (5.11.2.1.4) shall be available for use in the pit and in the headroom respectively;

e) opening by the use of a key of any door providing access to the well shall be checked by an electric safety device according to 5.11.1.2 which prevents all further movement of the lift. Movement shall only be possible under the requirements given in g) below;

f) all movement of the vehicle shall be prevented by means of an electric safety device in conformity with 5.11.1.2 unless the mechanical device is in its inactive position;

g) when the mechanical device is in its active position as checked by means of an electric safety device in conformity with 5.11.1.2, electrically driven movement of the vehicle shall only be possible from the inspection control station(s);

h) return of the lift to normal service shall only be made by operation of an electrical reset device placed outside of the well and accessible to authorized persons only, e. g. inside a locked cabinet.

5.3.4.4.2 When the vehicle is in the position according to 5.3.4.4.1 a), it shall be possible to leave the working area safely.

5.3.4.4.3 The necessary devices for emergency operation and for dynamic tests (such as brake tests, traction tests, safety gear tests, buffer tests or tests of ascending vehicle overspeed protection means) shall be arranged so that they can be carried out from outside of the well in accordance with 5.3.6.

5.3.4.5 Working areas on a platform in the well

5.3.4.5.1 Where machinery is to be maintained or inspected from a platform, it shall be:

a) permanently installed, and

b) retractable if it is in the travel path of the vehicle or counterweight/balancing weight.

5.3.4.5.2 Where machinery is to be maintained or inspected from a platform positioned into the travel path of the vehicle, the counterweight or the balancing weight:

a) the vehicle shall be stationary by using a mechanical device in conformity with 5.3.4.3.1, or

b) where the vehicle needs to be moved, the travel path of the vehicle shall be limited by movable stops in such a way that the vehicle is stopped:

   1) at least 2 m above the platform if the vehicle runs down towards the platform;

2) below the platform in compliance with 5.2.7.2 if the vehicle runs up towards the platform.

5.3.4.5.3 The platform shall be:

a) able to support at any position the mass of two persons, each counting for 1 000 N over an area of 0,20 m × 0,20 m without permanent deformation; if the platform is intended to be used for handling heavy equipment the dimensions shall be considered accordingly and the platform shall have a mechanical strength to withstand the loads and forces to which it is intended to be subjected (see 5.3.4.9);

b) provided with a balustrade in conformity with 5.5.13.3;

c) equipped with means ensuring that:

1) the step rise between the floor of the platform and the level of the access does not exceed 0,50 m;

2) it shall not be possible to pass a ball with a diameter of 0,15 m through any gap between the platform and the sill of the access door;

3) any gap measured horizontally between the fully open landing door panel and the platform edge does not exceed 0,15 m, unless additional provisions have been taken to prevent falling into the well.

5.3.4.5.4 In addition to 5.3.4.5.3 any retractable platform shall be:

a) provided with an electric safety device in conformity with 5.11.1.2, checking the fully retracted position;

b) provided with means for putting it into or removing it from the working position. This operation shall be possible from the pit or by means located outside of the well and accessible only to authorized persons.

If the access to the platform is not through a landing door, the opening of the access door shall be impossible when the platform is not in the working position, or alternatively, means shall be provided to prevent persons from falling into the well.

5.3.4.5.5 In the case of 5.3.4.5.2 b) movable stops shall be automatically operated when the platform is lowered. They shall be provided with:

a) buffers in conformity with 5.7.3 and 5.7.4;

b) an electric safety device in conformity with 5.11.1.2, which only allows vehicle movement if the stops are in their fully retracted position;

c) an electrical safety device in conformity with 5.11.1.2, which only allows vehicle movement with a lowered platform if the stops are in their fully extended position.

5.3.4.5.6 Where it is necessary to move the vehicle from the platform, an inspection control station according to 5.11.2.1.4 shall be available for use on the platform.

When the movable stop(s) is(are) in its active position, electrically driven movement of the vehicle shall only be possible from the inspection control station(s).

5.3.4.5.7 The necessary devices for emergency operation and dynamic tests (such as brake tests, traction tests, safety gear tests, buffer tests or tests of ascending vehicle overspeed protection means) shall be arranged so that they can be carried out from outside of the well in conformity with 5.3.6.

5.3.4.6 Doors and traps

5.3.4.6.1 Working areas inside the well shall be accessible through doors in the well enclosure. Doors shall be either the landing doors or doors satisfying the following requirements. They shall:

a) have a minimum width of 0,60 m and a minimum height of 1,80 m;

b) not open towards the inside of the well;

c) be provided with a key-operated lock, capable of being reclosed and relocked without a key;

d) be capable of being opened from inside the well without a key, even when locked;

e) be provided with an electrical safety device in conformity with 5.11.1.2, checking the closed position;

f) be imperforate, satisfy the same requirements for mechanical strength as the landing doors, and comply with the regulations relevant to the fire protection for the building concerned.

5.3.4.6.2 Access to machinery inside of the well from a working area outside of the well shall:

a) have sufficient dimensions to carry out the required work through the door/trap;

b) be as small as possible to avoid falling into the well;

c) not open towards the inside of the well;

d) be provided with a key-operated lock, capable of being reclosed and relocked without a key;

e) be provided with an electrical safety device in conformity with 5.11.1.2, checking the closed position;

f) be imperforate, satisfy the same requirements for mechanical strength as the landing doors, and comply with the regulations relevant to the fire protection for the building concerned.

5.3.4.7 Ventilation

The machinery spaces shall be suitably ventilated (see N.3.3 for information). The electric equipment of the machinery shall be protected as far as it is reasonably practicable from dust, harmful fumes and humidity.

5.3.4.8 Lighting and socket outlets

The working areas and machinery spaces shall be provided with permanently installed electric lighting with an intensity of at least 200 lx at floor level. The supply for this lighting shall be in conformity with 5.10.5.5.1.

This lighting may be part of the lighting of the well.

A switch accessible only to authorized persons and placed close to the access point(s) to working area(s), at an appropriate height, shall control the lighting of the areas and spaces.

At least one socket outlet (5.10.5.5.2) shall be provided at an appropriate place for each working area.

5.3.4.9 Handling of equipment

One or more metal supports or hooks with the indication of the safe working load (see 7.2.5.7), as appropriate, are provided in the machinery spaces, conveniently positioned to permit the hoisting of heavy equipment (see Introduction, 0.3 Principles).

5.3.5 Working areas and machinery outside of the well

5.3.5.1 General provisions

Machinery spaces outside of the well and not located in a separate machine room shall be so constructed to withstand the loads and forces to which they are intended to be subjected.

5.3.5.2 Machinery cabinet

5.3.5.2.1 The machinery of a lift shall be located inside a cabinet which shall not be used for purposes other than the lift. It shall not contain ducts, cables or devices other than for the lift.

5.3.5.2.2 The machinery cabinet shall consist of imperforate walls, floor, roof and door(s). The only permissible openings are:

a) ventilation openings;

b) necessary openings for the functioning of the lift between the well and the machinery cabinet;

c) vent openings for escape of gases and smoke in the event of fire.

These openings when accessible to non-authorized persons shall comply with the following requirements:

— protection according to EN ISO 13857:2008, Table 5, against contact with danger zones, and

— degree of protection of at least IP2XD against contact with electrical equipment.

5.3.5.2.3 The door(s) shall:

a) have sufficient dimensions to carry out the required work through the door;

b) not open towards the inside of the cabinet;

c) be provided with a key-operated lock, capable of being reclosed and relocked without a key.

5.3.5.3 Working area

When the machinery is in the well and is intended to be maintained/inspected from outside of the well, deviating from 5.3.1, the working areas in accordance with 5.3.3.3.1 and 5.3.3.3.2 can be provided outside of the well. Access to this equipment shall only be possible by a door/trap in conformity with 5.3.4.6.2.

The working area in front of a machinery cabinet shall comply with the requirements according to 5.3.4.2.

5.3.5.4 Ventilation

The machinery cabinet shall be suitably ventilated (see N.3.3 for information). It shall be such that the machinery is protected as far as it is reasonably practicable from dust, harmful fumes and humidity.

5.3.5.5 Lighting and socket outlets

The inside of the machinery cabinet shall be provided with permanently installed electric lighting with an intensity of at least 200 lx at floor level. The supply for this lighting shall be in conformity with 5.10.5.5.1.

A switch placed inside close to the door(s), at an appropriate height, shall control lighting of the cabinet.

At least one socket outlet (5.10.5.5.2) shall be provided.

5.3.6 Devices for emergency and test operations

5.3.6.1 In the case of 5.3.4.3, 5.3.4.4 and 5.3.4.5 the necessary devices for emergency and test operations shall be provided on a panel(s) suitable for carrying out from outside of the well all emergency operations and any necessary dynamic tests of the lift. The panel(s) shall be accessible to authorized persons only. This applies also to means for maintenance where maintenance procedure(s) require(s) moving the vehicle and the work cannot be carried out safely from the intended work areas provided inside the well.

If the emergency and test devices are not protected inside a machinery cabinet, they shall be enclosed with a suitable cover, which:

a) does not open towards the inside of the well;

b) is provided with a key-operated lock, capable of being reclosed and relocked without a key.

5.3.6.2 The panel(s) shall provide the following:

a) emergency operation devices according to 5.9.5, together with an intercom system in conformity with 5.11.2.3.2;

b) control equipment which enables dynamic tests to be carried out (5.3.4.3.2, 5.3.4.4.3, 5.3.4.5.7);

c) direct observation of the lift machine or display device(s), which give indication of:

   1) direction of movements of the vehicle;

   2) reaching of an unlocking zone, and

   3) speed of the vehicle.

5.3.6.3 The devices on the panel(s) shall be lit by a permanently installed electric lighting with an intensity of at least 50 lx measured at the device.

A switch placed on or close to the panel shall control lighting of the panel(s).

The electrical supply for this lighting shall be in conformity with 5.10.5.5.1.

5.3.6.4 The panel(s) for emergency and test operations shall be installed only where a working area in accordance with 5.3.3 is available.

5.3.7 Construction and equipment of pulley spaces

5.3.7.1 Pulley rooms

5.3.7.1.1 General

Pulleys outside of the well shall be located in a pulley room.

5.3.7.1.2 Mechanical strength, floor surface

5.3.7.1.2.1 The pulley rooms shall be so constructed to withstand the loads and forces to which they will normally be subjected.

They shall be in durable material, not favouring the creation of dust.

5.3.7.1.2.2 The floors of the pulley rooms shall be of non-slip material, e.g. troweled concrete or chequer plate.

5.3.7.1.3 Dimensions

5.3.7.1.3.1 Pulley room dimensions shall be sufficient to provide easy and safe access for maintenance personnel to all the equipment.

The requirements of 5.3.3.3.1 b) and 5.3.3.3.2, sentence two and three, are applicable.

5.3.7.1.3.2 The height under the ceiling shall be at least 1,50 m.

5.3.7.1.3.3 There shall be a clear space of at least 0,30 m high above the pulleys.

5.3.7.1.3.4 If there are control panels and cabinets in the pulley room the provisions of 5.3.3.3.1 and 5.3.3.3.2 apply to this room.

5.3.7.1.4 Doors and trap doors

5.3.7.1.4.1 Access doors shall have a minimum width of 0,60 m and minimum height of 1,40 m. They shall not open towards the inside of the room.

5.3.7.1.4.2 Access trap doors for persons shall give a clear passage of at least 0,80 m × 0,80 m and shall be counterbalanced.

All trap doors, when they are closed, shall be able to support two persons, each counting for 1 000 N on an area of 0,20 m × 0,20 m at any position, without permanent deformation.

Trap doors shall not open downwards, unless they are linked to retractable ladders. Hinges, if any, shall be of a type which cannot be unhooked.

When a trap door is in the open position, precautions shall be taken to prevent the fall of persons (e.g. a guardrail).

5.3.7.1.4.3 Doors or trap doors shall be provided with a key operated lock, capable of being opened without a key from inside the room.

5.3.7.1.5 Other openings

The dimensions of holes in the slab and pulley room floor shall be reduced to a minimum for their purpose.

With the aim of removing the danger of objects falling through openings situated over the well, including those for electric cables, ferrules shall be used which project at least 50 mm above the slab or finished floor.

5.3.7.1.6 Stopping device

A stopping device, in conformity with 5.11.2.2 and 7.2.5.6 shall be installed in the pulley room, close to the point(s) of access.

5.3.7.1.7 Temperature

If there is a risk of frost or condensation in the pulley rooms, precautions shall be taken to protect the equipment.

If the pulley rooms also contain electrical equipment, the ambient temperature shall be similar to that of the machine room.

5.3.7.1.8 Lighting and socket outlets

The pulley room shall be provided with permanently installed electric lighting with an intensity of at least 100 lx at the pulley(s). The supply for this lighting shall be in conformity with 5.10.5.5.1.

A switch, placed inside, close to the access point, at an appropriate height, shall control the lighting of the room.

At least one socket outlet in conformity with 5.10.5.5.2 shall be provided.

If there are control panels and cabinets in the pulley room, the provisions of 5.3.3.7 apply.

5.3.7.2 Pulleys in the well

Diverter pulleys may be installed in the headroom of the well provided that they are located outside the projection of the car or vehicle and that examinations and tests and maintenance operations can be carried out in complete safety from the car roof, from inside the car (5.3.4.3), from a platform (5.3.4.5) or from outside of the well.

However, a diverter pulley, with single or double wrap, may be installed above the car roof for diverting towards the counterweight, provided that its shaft can be reached in complete safety from the car roof or from a platform (5.3.4.5).

5.4 Landing doors

5.4.1 General provisions

The openings in the well giving access to the well shall be provided with imperforate landing doors.

When closed, the clearance between panels, or between panels and uprights, lintels or sills, shall be as small as possible.

This condition is considered to be fulfilled when the operational clearances do not exceed 6 mm. This value, due to wear, may reach 10 mm. These clearances are measured at the back of recesses, if present.

5.4.2 Strength of doors and their frames

5.4.2.1 General provisions

Landing doors and their frames shall be constructed in such a way that they will not become deformed over the course of time.

5.4.2.2 Behaviour under fire conditions

Landing doors shall comply with the regulations relevant to the fire protection for the building concerned. EN 81-58:2003 shall be applied for the testing and certification of such doors.

5.4.2.3 Mechanical strength

5.4.2.3.1 Complete landing doors, with their locks, shall have a mechanical strength such that in the locked position and when a force of 300 N, being evenly distributed over an area of 5 cm^2 in round or square section, is applied at right angles to the panel/frame at any point on either face they shall resist without:

a) permanent deformation (e.g. less than 1 mm);

b) elastic deformation greater than 15 mm.

During and after such a test the safety function of the door shall not be affected.

5.4.2.3.2 Under the application of a manual force (without a tool) of 150 N in the direction of the opening of the leading landing door panel(s) of horizontally sliding doors and folding doors, at the most unfavourable point, the clearances defined in 5.4.1 may exceed 6 mm, but they shall not exceed:

a) 30 mm for side opening doors;

b) 45 mm in total for centre opening doors.

5.4.2.3.3 Door panels made of glass shall be fixed in such a way that forces demanded by this standard which may be applied are transferred without damaging the fixing of the glass.

Doors, with glass of dimensions greater than stated in 5.4.6.2, shall use laminated glass and, additionally withstand the pendulum shock tests, described in Annex J.

After the tests the safety function of the door shall not be affected.

5.4.2.3.4 The fixing of the glass in doors shall ensure that the glass cannot slip out of the fixings, even when sinking.

5.4.2.3.5 The glass panels shall have markings giving the following information:

a) name of the supplier and trade mark;

b) type of glass;

c) thickness (e.g. 8/8/0,76 mm).

5.4.2.3.6 To avoid dragging of children hands, automatic power operated horizontally sliding doors made of glass of dimensions greater than stated in 5.4.6.2 shall be provided with means to minimize the risk, such as:

a) reducing the coefficient of friction between hands and glass;

b) making the glass opaque up to a height of 1,10 m;

c) sensing the presence of fingers, or

d) other equivalent methods.

5.4.3 Height and width of entrances

5.4.3.1 Height

Landing doors shall be such that a minimum clear height of the entrance is 2,00 m.

5.4.3.2 Width

The clear entrance of the landing doors shall not extend more than 50 mm in width beyond the clear car entrance on both sides.

5.4.4 Sills, guides, door suspension

5.4.4.1 Sills

Every landing entrance shall incorporate a sill of sufficient strength to withstand the passage of loads being introduced into the car.

It is recommended that a slight counter slope be provided in front of each landing sill to avoid water from washing, sprinkling, etc., draining into the well.

5.4.4.2 Guides

5.4.4.2.1 Landing doors shall be designed to prevent, during normal operation, derailment, mechanical jamming, or displacement at the extremities of their travel.

Where the guides may become ineffective due to wear, corrosion or fire, emergency guidance shall be provided to maintain the landing doors in their position.

5.4.4.2.2 Horizontally sliding landing doors shall be guided top and bottom.

5.4.4.2.3 Vertically sliding landing doors shall be guided at both sides.

5.4.4.3 Suspension of vertically sliding doors

5.4.4.3.1 Panels of vertically sliding landing doors shall be fixed to two independent suspension elements.

5.4.4.3.2 Suspension ropes, chains, belts shall be designed with a safety factor of at least 8.

5.4.4.3.3 The pitch diameter of suspension rope pulleys shall be at least 25 times the rope diameter.

5.4.4.3.4 Suspension ropes and chains shall be guarded against leaving the pulley grooves or sprockets.

5.4.5 Protection in relation to door operation

5.4.5.1 General

The doors and their surrounds shall be designed in such a way as to minimize risk of damage or injury due to jamming of a part of the person, clothing or other object.

To avoid the risk of shearing during operation, the exterior face of automatic power operated sliding doors shall not have recesses or projections exceeding 3 mm. Edges of these shall be chamfered in the opening direction of movement.

Exception to these requirements is made for the access to the unlocking triangle defined in Annex B.

The side of the landing doors facing to the car shall have a smooth, continuous surface which has no recesses or projections exceeding 3 mm, for all parts likely to be exposed when the car doors open and for all the possible stopping positions of the car in the unlocking zone.

5.4.5.2 Power operated doors

5.4.5.2.1 General provision

Power operated doors shall be designed to reduce to a minimum the harmful consequences of a person being struck by a door panel.

To this effect, the following requirements shall be met:

5.4.5.2.2 Horizontally sliding doors

5.4.5.2.2.1 Automatic power operated doors

a) The effort needed to prevent the door closing shall not exceed 150 N. This measurement shall not be made in the first third of the travel of the door.

b) The kinetic energy of the landing door and the mechanical elements which are rigidly connected to it, calculated or measured at the average closing speed shall not exceed 10 J.

   The average closing speed of a sliding door is calculated over its whole travel, less:

   1) 25 mm at each end of the travel in the case of centrally closing doors;

2) 50 mm at each end of the travel in the case of side closing doors.

NOTE Measured using, for example, a device consisting of a graduated piston acting on a spring with a spring constant of 25 N/mm, and fitted with an easy sliding ring allowing the extreme point of movement at the moment of impact to be measured. An easy calculation allows the graduation corresponding to the limits fixed to be determined.

c) A protective device shall automatically initiate re-opening of the door in the event of a person being struck, or about to be struck, by the door in crossing the entrance during the closing movement.

This protective device may be that for the car door (see 5.5.7.2.2.1 c)).

The effect of the device may be neutralized during the last 50 mm of travel of each leading door panel.

In the case of a system, which makes the protective device inoperative after a predetermined time, to counteract persistent obstructions when closing the door, the kinetic energy defined in 5.4.5.2.2.1 b) shall not exceed 4 J during movement of the door with the protective device inoperative.

d) In the case of coupled car and landing doors operated simultaneously, the requirements of 5.4.5.2.2.1 a) and b) are valid for the joined door mechanism.

e) The effort needed to prevent a folding door from opening shall not exceed 150 N. This measurement shall be made with the door collapsed such that the adjacent outer edges of the folded panels or equivalent, e.g. door frame, are at a distance of 100 mm.

5.4.5.2.2.2 Non-automatic power operated doors

When the closing of the door is carried out under the continuous control and supervision of the user, by continuous pressure on a button or similar (hold-to-run control), the average closing speed of the fastest panel shall be limited to 0,30 m/s, when the kinetic energy, calculated or measured as stated in 5.4.5.2.2.1 b), exceeds 10 J.

5.4.5.2.3 Vertically sliding doors

This type of sliding door shall only be used for goods passenger lifts.

Power closing shall only be used if the following four conditions are fulfilled at the same time:

a) the closing is carried out under the continuous control and supervision of the users;

b) the average closing speed of the panels is limited to 0,30 m/s;

c) the car door is of construction as provided for in 5.5.6.1.1;

d) the car door is at least two-thirds closed before the landing door begins to close.

5.4.5.2.4 Other types of doors

When using other types of doors, e.g. swing doors, with power operation, where there is a risk when opening or closing, of striking persons, precautions similar to those laid down for power operated sliding doors shall be taken.

5.4.6 Local lighting and “car here” signal lights

5.4.6.1 Local lighting

The natural or artificial lighting of the landings in the vicinity of landing doors shall be at least 50 lx at floor level, such that a user can see ahead when he is opening the landing door to enter the lift, even if the car light has failed (see Introduction - Principles).

5.4.6.2 “Car here” indication

In the case of landing doors with manual opening, the user needs to know, before opening the door, whether the car is there or not.

To this effect, there shall be installed, either:

a) one or more transparent vision panels conforming to the following four conditions at the same time:

   1) mechanical strength as specified in 5.4.2.3.1, with the exception of the pendulum shock tests;

   2) minimum thickness of 6 mm;

   3) minimum glazed area per landing door of 0,015 m^2 with a minimum of 0,01 m^2 per vision panel;

   4) width of at least 60 mm, and at most 150 mm. The lower edge of vision panels which are wider than 80 mm shall be at least 1,00 m above floor level, or

b) an illuminated “car here” signal which can only light up when the car is about to stop or has stopped at the particular landing. The signal shall remain illuminated while the car remains there.

5.4.7 Locking and closed landing door check

5.4.7.1 Protection against the risk of falling

5.4.7.1.1 Side-mounted doors

The unlocking zone, according to the trajectory, shall have a maximum of 0,20 m on either side of the level served, along the angle of inclination.

5.4.7.1.2 Front-mounted doors

The condition defined in 5.8.2.2 shall be respected independently of the variations of load in the car.

5.4.7.2 Protection against shearing

5.4.7.2.1 General provisions

With the exception of 5.4.7.2.2, it shall not be possible in normal operation to start the lift nor keep it in motion if a landing door or any of the panels in the case of a multi-panel door is open. However, preliminary operations for the movement of the car may take place.

5.4.7.2.2 Operation with doors open

5.4.7.2.2.1 Side-mounted doors

Car operation with landing door open is permitted in a zone of plus or minus 0,05 m in the direction of travel thereby allowing re-levelling. The requirements of 5.11.2.1.3 shall be complied with.

5.4.7.2.2.2 Front-mounted doors

Re-levelling shall be activated when the limit of 5.8.2.2 is exceeded.

5.4.7.3 Locking and emergency unlocking

5.4.7.3.1 General provisions

Each landing door shall be provided with a locking device satisfying the conditions of 5.4.7.1. This device shall be protected against deliberate misuse.

The locking device is regarded as a safety component and shall be verified according to the requirements in F.1.

5.4.7.3.2 Locking

5.4.7.3.2.1 The effective locking of the landing door in the closed position shall precede the movement of the vehicle. However, preliminary operations for the movement of the vehicle may take place. The locking shall be proved by an electric safety device in conformity with 5.11.1.2.

5.4.7.3.2.2 The vehicle shall not be able to start until the locking elements are engaged by at least 7 mm; see Figure 3.

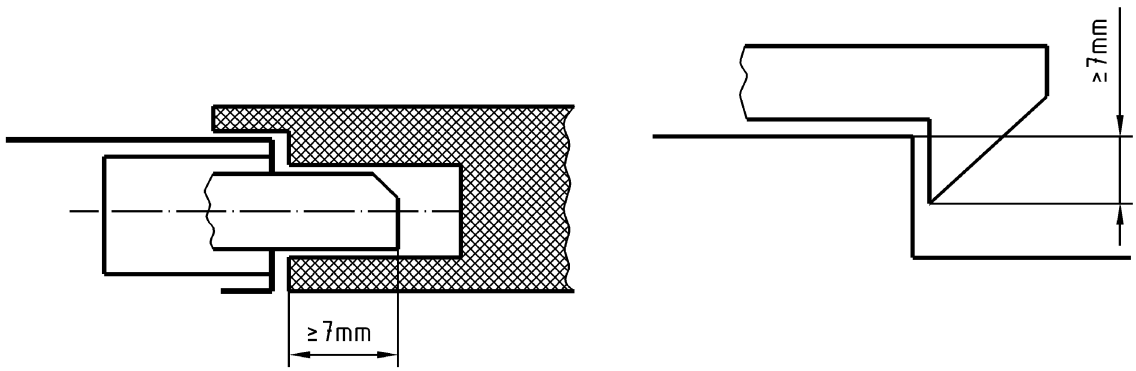

Figure 3 — Examples of locking elements

5.4.7.3.2.3 The element of the electric safety device proving the locked condition of the door panel(s) shall be positively operated without any intermediate mechanism by the locking element. It shall be fool-proof but adjustable if necessary.

Specific case In the case of locking devices used in installations requiring special protection against risks of humidity or explosion the connection may be only positive, provided the link between the mechanical lock and the element of the electric safety device proving the locked condition, can only be interrupted by destroying deliberately the locking device.

5.4.7.3.2.4 For hinged doors, locking shall be effected as near as possible to the vertical closing edge(s) of the doors, and maintained even in the case of panels sagging.

5.4.7.3.2.5 The locking elements and their fixings shall be resistant to shock, and be made or reinforced with metal.

5.4.7.3.2.6 The engagement of the locking elements shall be achieved in such a way that a force of 300 N in the opening direction of the door does not diminish the effectiveness of locking.

5.4.7.3.2.7 The lock shall resist, without permanent deformation during the test laid down in F.1, a minimum force at the level of the lock and in the direction of opening of the door of:

a) 1 000 N in the case of sliding doors;

b) 3 000 N on the locking pin, in the case of hinged doors.

5.4.7.3.2.8 The locking action shall be effected and maintained by the action of gravity, permanent magnets, or springs. The springs shall act by compression, be guided and of such dimensions that, at the moment of unlocking, the coils are not compressed solid.

In the event of the permanent magnet (or spring) no longer fulfilling its function, gravity shall not cause unlocking.

If the locking element is maintained in position by the action of a permanent magnet, it shall not be possible to neutralize its effect by simple means (e.g. heat or shock).

5.4.7.3.2.9 The locking device shall be protected against the risk of an accumulation of dust, which could hinder its proper functioning.

5.4.7.3.2.10 Inspection of the working parts shall be easy, as, for example, by use of a vision panel.

5.4.7.3.2.11 In the case where the lock contacts are in a box, the fixing screws for the cover shall be of the captive type, so that they remain in the holes in the cover or box when opening the cover.

5.4.7.3.3 Emergency unlocking

5.4.7.3.3.1 Each of the landing doors shall be capable of being unlocked from the outside with the aid of a key, which will fit the unlocking triangle as defined in Annex B.

Keys of this type shall be given only to a responsible person. They shall be accompanied by a written instruction detailing the essential precautions to be taken in order to avoid accidents which could result from an unlocking which was not followed by effective relocking.

5.4.7.3.3.2 After an emergency unlocking, the locking device shall not be able to remain in the unlocked position with the landing door closed.

5.4.7.3.3.3 In the case of landing doors driven by the car door, a device (either weight or springs) shall ensure the automatic closing and locking of the landing door if this door becomes open, for whatever reason, when the car is outside the unlocking zone.

5.4.7.4 Electrical device for proving the landing door closed

5.4.7.4.1 Each landing door shall be provided with an electric safety device in conformity with 5.11.1.2 for proving the closed position, so that the conditions imposed by 5.4.7.1 are satisfied.

5.4.7.4.2 In the case of horizontally sliding landing doors, coupled with car doors, this device may be in common with the device for proving the locked condition, provided that it is dependent upon the effective closing of the landing door.

5.4.7.4.3 In the case of hinged landing doors, this device shall be placed adjacent to the closing edge of the door or on the mechanical device proving the closed condition of the door.

5.4.7.5 Requirements common to devices for proving the locked condition and the closed condition of the door

5.4.7.5.1 It shall not be possible, from positions normally accessible to persons, to operate the lift with a landing door open or unlocked, after one single action not forming part of the normal operating sequence.

5.4.7.5.2 The means used to prove the position of a locking element shall have positive operation.

5.4.7.6 Sliding doors with multiple, mechanically linked panels

5.4.7.6.1 If a sliding door comprises several directly mechanically linked panels, it is permitted:

a) to place the device required in 5.4.7.4.1 or 5.4.7.4.2, on a single panel, and

b) to lock only one panel, provided that this single locking prevents the opening of the other panel(s) by hooking the panels in the closed position in case of telescopic doors.

5.4.7.6.2 If a sliding door comprises several indirectly, mechanically linked panels (e.g. by rope, belt or chain), it is permitted to lock only one panel provided that this single locking will prevent the opening of other panels, and that these are not fitted with a handle.

The closed position of the other panel(s), not locked by the locking device, shall be proved by an electric safety device in conformity with 5.11.1.2.

5.4.8 Closing of automatically operated doors

In normal operation, automatically operated landing doors shall be closed after the necessary period of time, which may be defined according to the traffic using the lift, in the absence of a command for the movement of the vehicle.

5.5 Car, vehicle, counterweight, balancing weight

5.5.1 Height of the car

5.5.1.1 The interior clear height of the car shall be at least 2,00 m.

5.5.1.2 The clear height of the car entrance(s) for the normal access of users shall be at least 2,00 m.

5.5.2 Available car area, rated load, number of passengers

5.5.2.1 General case

5.5.2.1.1 To prevent overloading of the car by persons, the available area of the car shall be limited.

The car area shall be measured from wall to wall car body inner dimensions excluding finishes.

To this effect the relationship between rated load and maximum available area is given in Table 2.

5.5.2.1.2 Recesses and extensions, even of height less than 1,00 m, whether protected or not by separating doors, are only permitted if their area is taken into account in the calculation of maximum available car area.

Any available area in the entrance, when the doors are closed, greater than 100 mm deep, shall also be included into the floor area for the purpose of calculation.

5.5.2.1.3 Overloading of the car shall be monitored by means of a device according to 5.11.2.5.

Table 2 — Rated load and maximum available car area

Rated load, mass kg	Maximum available car area m^2	Rated load, mass kg	Maximum available car area m^2
100 [a]	0,37	900	2,20
180 [b]	0,58	975	2,35
225	0,70	1 000	2,40
300	0,90	1 050	2,50
375	1,10	1 125	2,65
400	1,17	1 200	2,80
450	1,30	1 250	2,90
525	1,45	1 275	2,95
600	1,60	1 350	3,10
630	1,66	1 425	3,25
675	1,75	1 500	3,40
750	1,90	1 600	3,56
800	2,00	2 000	4,20
825	2,05	2 500 [c]	5,00
For intermediate loads the area is determined by linear interpolation.			

[a] Minimum for 1 person lift.
[b] Minimum for 2 persons lift.
[c] Beyond 2 500 kg add 0,16 m^2 for each extra 100 kg.

5.5.2.2 Goods passenger lifts

The requirements of 5.5.2.1 shall be applied and, in addition, design calculations shall take into account not only the rated load but also the weight of handling devices, which may enter the car.

5.5.2.3 Number of passengers

The available area of the car or of each section of the car shall be determined in conformity with Table 2.

The number n of passengers of the car or of each section of the car shall be obtained from:

a) the formula $n = Q / 75$, with the result rounded down to the nearest whole number, or

b) Table 3

which gives the smaller value.

There is:

n the number of persons admitted in the car or the section;

Q the rated load.

Table 3 — Number of passengers and minimum car available area

Number of passengers	Minimum available car area m^2	Number of passengers	Minimum available car area m^2
1	0,28	11	1,87
2	0,49	12	2,01
3	0,60	13	2,15
4	0,79	14	2,29
5	0,98	15	2,43
6	1,17	16	2,57
7	1,31	17	2,71
8	1,45	18	2,85
9	1,59	19	2,99
10	1,73	20	3,13
Beyond 20 persons add 0,115 m^2 for each extra passenger.			

5.5.3 Walls, floor and roof of the car

5.5.3.1 Structural design

5.5.3.1.1 The car shall be completely enclosed by walls, floor and roof, the only permissible openings being as follows:

a) entrances for the normal access of users;

b) emergency trap doors and doors;

c) ventilation apertures.

5.5.3.1.2 The walls, floor and roof shall have sufficient mechanical strength. The assembly comprising the carriage (or the sling), the walls, floor and roof of the car shall have sufficient mechanical strength to resist the forces, which will be applied in normal lift operation, in safety gear operation or impact of the vehicle on its buffers.

5.5.3.1.3 Each side wall of the car shall have a mechanical strength such that when a force of 300 N, being evenly distributed over an area of 5 cm^2 in round or square section, is applied at right angles to the wall at any point from the inside of the car towards the outside, it shall:

a) withstand without any permanent deformation;

b) withstand without elastic deformation greater than 15 mm.

Furthermore, the downwards and upwards facing walls shall be able, without elastic deformation of more than 15 mm to withstand the shock of passengers who can be projected against the walls in case of safety gear operation.

The dynamic force exerted in the direction of travel by the passengers (H_{x1}) shall be determined as follows:

c) For cars with a capacity of more than 40 persons, this force H_{x1} shall be determined on the basis of the rated load of the car or of the section taking into account the maximum deceleration due to the action of one or other of the brakes. This value shall not be less than 5 000 N/m.

d) For cars with a lower capacity, this value may be reduced by the following formula:

H_{x1} = 5 000 – 100 × (40-n) in newtons per metre

where

n is the number of standing passengers transported in each section of the car according to 5.5.2.3.

This force is applied 1,10 m above the floor in the absence of a rail.

5.5.3.1.4 Walls with glass shall use laminated glass. The walls shall withstand the pendulum shock tests, described in Annex J.

For downwards and upwards facing glass walls it shall be verified by appropriate calculation that the walls withstand the forces mentioned and calculated in 5.5.3.1.3. If the resulting shock is higher than the shock in the test defined in J.4.3, the glass shall be protected by handrails that withstand these forces (see EN 13796-1:2005, Figure 10). This handrail shall be fastened independently from the glass.

Car walls with glass placed lower than 1,00 m from the floor shall have a handrail at a height between 0,90 m and 1,10 m. This handrail shall be fastened independently from the glass.

5.5.3.1.5 The fixing of the glass in the wall shall ensure that the glass cannot slip out of the fixings, even when sinking.

5.5.3.1.6 The glass panels shall have markings giving the following information:

a) name of the supplier and trademark;

b) type of glass;

c) thickness (e.g. 8/8/0,76 mm).

5.5.3.1.7 The car roof shall satisfy the requirements of 5.5.13.

5.5.3.1.8 The interior walls of the car shall be designed in order to prevent passengers from sustaining injuries if there is a contact (elimination of sharp edges and stripped parts).

5.5.3.2 Maintaining of passengers and of goods

Whenever there are persons in the car, they shall be able to ensure their stability, e.g. by using a handrail or a post located close by.

Furthermore, handrails may also be located in order to divide the car in sections (for forces, see 5.5.3.1.3 c) and d)).

5.5.3.3 Fire protection

Fire protection and building requirements differ from country to country and so far neither have been harmonized.

Therefore, this standard cannot include specific requirements for fire protection and building requirements. However, it is recommended that as far as possible, inclined lifts are made of materials that do not create an additional hazard in case of fire.

5.5.3.4 Floor of the car and link with the landings

The floor of the car shall stay appreciably horizontal over all the travel. A tolerance of plus or minus 6° is permitted.

The floor of the car can include several interconnected levels by stairs or steps. In that case, handrails shall be installed and the edges of the steps shall be indicated.

The floor of the car shall be such as to provide a secure foothold (see Annex P for information).

The landings shall be horizontal in the direction of travel. In all the cases, a difference of level between the landing door sill and the car door sill shall remain less than 20 mm over the full width of the door.

5.5.4 Car apron

5.5.4.1 Each car sill shall be fitted with an apron, which extends to the full width of the clear landing entrance, which it faces. This vertical section shall be extended downwards by a chamfer whose angle with the horizontal plane shall be greater than 60°. The projection of this chamfer of the horizontal plane shall be not less than 20 mm.

The aprons shall extend over the full width, which could be exposed and equipped on both ends with the same chamfer. The position of the car to be taken into account is defined in 5.2.4.2.

5.5.4.2 For side-mounted door, the vertical dimension shall allow protecting all the surface likely to be exposed.

For front-mounted door faced to the lower landing, the height of the vertical portion shall be at least 0,30 m.

5.5.5 Car entrance

Car entrances shall be provided with doors.

5.5.6 Car doors

5.5.6.1 General provision

5.5.6.1.1 The car doors shall be imperforate, except for goods passenger lifts, which may use vertically sliding car doors, opening upwards, and these may be in mesh or perforated panel form. The dimensions of the mesh or perforations shall not exceed 10 mm horizontally and 60 mm vertically.

5.5.6.1.2 The car doors when closed shall, apart from the necessary clearances, completely close the car entrances.

5.5.6.1.3 When closed, the clearance between panels, or between panels and uprights, lintels or sills, shall be as small as possible.

This condition is considered to be fulfilled when the operational clearances do not exceed 6 mm. This value, due to wear, may reach 10 mm. These clearances are measured at the back of recesses, if present. Exception is made for vertically sliding doors, according to 5.5.6.1.1.

5.5.6.1.4 In the case of hinged doors, they shall strike stops to prevent them swinging outside the car.

5.5.6.1.5 The car door shall be fitted with a vision panel(s) if the landing door has a vision panel(s) (5.4.6.2 a)) unless the car door is automatic and remains in the open position when the car is stationary at the level of a landing.

When a vision panel(s) is fitted it shall satisfy the requirements of 5.4.6.2 a) and be positioned in the car door such that it is in visual alignment with the landing door vision panel(s) when the car is at the level of the landing.

5.5.6.2 Sills, guides, door suspension

The provisions of 5.4.4 relevant to car doors shall be observed.

5.5.6.3 Mechanical strength

5.5.6.3.1 Car doors in the closed position shall have a mechanical strength such as specified for landing doors in 5.4.2.3.

5.5.6.3.2 Furthermore, for side-mounted doors, the strength of the door and its locking system and the dynamic stress induced by the panels in all cases of braking or safety gear operation shall be taken into account.

5.5.6.3.3 Front-mounted doors in the closed position shall be able to withstand the forces defined in 5.5.3.1.3, due to the projection of passengers likely to be thrown against this door in event of braking or safety gear operation under the most unfavourable conditions.

For that purpose, doors shall withstand, on their own, the soft pendulum shock test as specified in Annex J with a falling height increased to 1 400 mm without loss of integrity of the door assembly.

5.5.6.3.4 In all situations the car door shall be maintained locked.

5.5.7 Protection during operation of doors

5.5.7.1 General

The doors and their surrounds shall be designed in such a way as to minimize risk of damage or injury due to jamming of a part of the person, clothing or other object.

To avoid the risk of shearing during operation, the face on the car side of automatic power operated sliding doors shall not have recesses or projections exceeding 3 mm. Edges of these shall be chamfered in the opening direction of movement. Both is not required for perforated doors in accordance with 5.5.6.1.1.

If the car door drive and the landing door drive are not simultaneous, provisions applying to all parts of the side containing the car door faced to the landing door and likely to be exposed when the landing door opens in the full opening zone of the doors, shall allow to avoid any risk of jamming or shearing.

5.5.7.2 Power operated doors

5.5.7.2.1 General provisions

Power operated doors shall be designed to reduce to a minimum the harmful consequences of a person being struck by a door panel.

To this effect the following requirements shall be met.

In the case of coupled car and landing doors operated simultaneously, the following requirements are valid for the joint door mechanism.

5.5.7.2.2 Horizontally sliding doors

5.5.7.2.2.1 Automatic power operated doors

a) The effort needed to prevent the door closing shall not exceed 150 N. This measurement shall not be made in the first third of the travel of the door.

b) The kinetic energy of the car door and the mechanical elements, which are rigidly connected to it, calculated or measured at the average closing speed shall not exceed 10 J.

The average closing speed of a sliding door is calculated over its whole travel, less:

1) 25 mm at each end of the travel in the case of centrally closing doors;

2) 50 mm at each end of the travel in the case of side closing doors.

NOTE Measured using, for example, a device consisting of a graduated piston acting on a spring with a spring constant of 25 N/mm, and fitted with an easy sliding ring allowing the extreme point of movement at the moment of impact to be measured. An easy calculation allows the graduation corresponding to the limits fixed to be determined.

c) A protective device shall automatically initiate re-opening of the door in the event of a person being struck, or about to be struck, by the door in crossing the entrance during the closing movement.

The effect of the device may be neutralized during the last 50 mm of travel of each leading door panel.

In the case of a system which makes the protection device inoperative after a predetermined period of time, to counteract persistent obstructions when closing the door, the kinetic energy defined in 5.5.7.2.2.1 b) shall not exceed 4 J during movement of the door with the protective device inoperative.

d) The effort needed to prevent a folding door from opening shall not exceed 150 N. This measurement shall be made with the door collapsed such that the adjacent outer edges of the folded panels or equivalent, e.g. door-frame, are at a distance of 100 mm.

e) If a folding door is going into a recess the distance between any outer edge of the doorfold and the recess shall be at least 15 mm.

5.5.7.2.2.2 Non-automatic power operated doors

When the closing of the door is carried out under the continuous control and supervision of the user, by continuous pressure on a button or similar (hold-to-run control), the average closing speed of the fastest panel shall be limited to 0,3 m/s, when the kinetic energy, calculated or measured as stated in 5.4.5.2.2.1 b), exceeds 10 J.

5.5.7.2.3 Vertically sliding doors

This type of sliding door shall only be used for goods passenger lifts.

Power closing shall only be used if the following four conditions are fulfilled at the same time:

a) the closing is carried out under the continuous control and supervision of the users ;

b) the average closing speed of the panels is limited to 0,3 m/s;

c) the car door is of construction as provided for in 5.5.6.1.1;

d) the car door is at least two-thirds closed before the landing door begins to close.

5.5.8 Reversal of closing movement

If doors are automatic power operated a device permitting the closing movement to be reversed shall be located with the other car controls.

5.5.9 Electrical device for proving the car doors closed

5.5.9.1 With the exception of 5.4.7.2.2, it shall not be possible in normal operation to start the lift nor keep it in motion if a car door (or any of the panels in the case of a multi-panel door) is open. However, preliminary operations for the movement of the vehicle may take place.

5.5.9.2 Each car door shall be provided with an electric safety device for proving the closed position in conformity with 5.11.1.2 so that the conditions imposed by 5.5.9.1 are satisfied.

5.5.9.3 If the car door needs to be locked (see 5.8.2.1 b)), the locking device shall be designed and operated in analogy to the landing door locking device (see 5.4.7.3.2.1 and 5.4.7.3.2.2).

5.5.10 Sliding doors with multiple, mechanically linked panels

5.5.10.1 If a sliding door comprises several directly mechanically linked panels, it is permitted:

a) to place the device defined in 5.5.9.2 either:

   1) on a single panel (the rapid panel in the case of telescopic doors), or

   2) on the door driving element if the mechanical connection between this element and the panels is direct, and

b) in the case and conditions laid down in 5.8.2.1 b), to lock only one panel, provided that this single locking prevents the opening of the other panels by hooking the panels in the closed position in the case of telescopic doors.

5.5.10.2 If a sliding door comprises several indirectly mechanically linked panels (e.g. by rope, belt or chain), it is permitted to place the device (5.5.9.2) on a single panel, provided that:

a) this is not the driven panel, and

b) the driven panel is directly mechanically linked to the door driving element.

5.5.11 Opening the car door

5.5.11.1 In order to permit passengers to leave the lift car, if the lift stops for any reason close to a landing, it shall be possible with the vehicle stopped and the supply to the door operator (if any) disconnected:

a) to open or partly open the car door by hand from the landing ;

b) to open or partly open the car door together with the landing door linked to it if they are coupled, by hand from within the car.

5.5.11.2 The opening of the car door provided for in 5.5.11.1 shall be able to be carried out at least in the unlocking zone.

The force necessary to open it shall not exceed 300 N.

In the case of lifts covered by 5.8.2.1 b), the opening of the car door from inside the car shall be possible only when the car is in the unlocking zone.

5.5.11.3 The opening of the car door with the lift in motion, the rated speed of which exceeds 1 m/s, shall require a force greater than 50 N.

This requirement is not obligatory in the unlocking zone.

5.5.12 Emergency trap doors and emergency doors

5.5.12.1 General

5.5.12.1.1 Assistance to passengers in the car shall always come from outside, being provided in particular by the emergency operation mentioned in 5.9.5.

5.5.12.1.2 If emergency trap doors or doors are installed, they shall conform to 5.5.3.1.2 and 5.5.3.1.3.

5.5.12.1.3 Car doors may be used as emergency exits. In this case, they shall be provided with an unlocking device accessible from outside of the car

5.5.12.2 Emergency trap doors

5.5.12.2.1 If there is an emergency trap door in the car roof to permit the rescue and evacuation of passengers, it shall measure at least 0,35 m × 0,50 m.

5.5.12.2.2 Emergency trap doors shall be opened from outside the car without a key and from inside the car with a key suited to the triangle defined in Annex B.

5.5.12.2.3 Emergency trap doors shall not open towards the inside of the car.

5.5.12.2.4 Emergency trap doors in the open position shall not project beyond the edge of the lift car.

5.5.12.3 Emergency doors

5.5.12.3.1 If emergency doors exist, they shall measure at least 1,80 m high and 0,35 m wide. Emergency doors may be used in the case of adjacent lifts, provided, however, that the horizontal distance between cars does not exceed 0,75 m (see 5.2.2.4.2.1 c)).

At over 0,75 m, it is necessary to provide a device allowing the passage of persons from one car to the other with no danger. The installation of the device shall have electrical devices which prevent movement of each lift.

5.5.12.3.2 Emergency doors shall be opened from outside the car without a key and from inside the car using a key suited to the triangle defined in Annex B.

5.5.12.3.3 Emergency doors shall not open towards the outside of the car.

5.5.12.3.4 Emergency doors shall not be located in the travel path of a counterweight or a balancing weight or in front of a fixed obstacle (except for beams separating the cars) preventing passage from one car to another.

5.5.12.4 Locking of emergency trap doors and emergency doors

5.5.12.4.1 Emergency trap doors and doors shall be provided with a means for manual locking.

5.5.12.4.2 The locking shall be proved by means of an electric safety device in conformity with 5.11.1.2.

This device shall cause the lift to stop if the locking ceases to be effective.

Restoring the lift to service shall only be possible after deliberate relocking.

5.5.13 Working station

5.5.13.1 General

In addition to 5.5.3, when maintenance operations are made from a specifically arranged working station either on the car roof, on an inspection platform, or inside the car, the following requirements apply.

5.5.13.2 Strength and dimensions

5.5.13.2.1 The floor of the working station shall be able to support at any position the mass of two persons, each counting for 1 000 N on an area of 0,20 m × 0,20 m, without permanent deformation.

The surface of the floor shall be such as to provide a secure foothold (see Annex P for information).

5.5.13.2.2 For the car roof, there will be at one point a clear area for standing of at least 0,12 m^2, in which the lesser dimension is at least 0,25 m.

5.5.13.2.3 For the platform, the area is at least 0,24 m^2, in which the lesser dimension is at least 0,40 m.

5.5.13.2.4 Glass used for the car roof shall be laminated.

5.5.13.3 Balustrade

5.5.13.3.1 The working station shall be provided with a balustrade where the free distance in a horizontal plane, beyond and perpendicular to its outer edge exceeds 0,30 m.

The free distances shall be measured to the wall of the well allowing a greater distance in recesses, the width or height of which is less than 0,30 m.

5.5.13.3.2 The balustrade shall consist of a handrail, a toe guard of 0,10 m height and an intermediate bar at half the height of the balustrade.

The whole shall be an effective protection to support a horizontal force of 1 000 N per person likely to take place there.

5.5.13.3.3 Considering the free distance in a horizontal plane beyond the outer edge of the handrail, its height shall be at least 1,10 m.

5.5.13.3.4 The free horizontal distance between the outer edge of the handrail and any part in the well (counterweight or balancing weight, switches, rails, brackets, etc.) shall be at least 0,10 m.

5.5.13.3.5 The balustrade at the access side(s) shall provide safe and easy access to the working station.

5.5.13.3.6 The balustrade shall be located within 0,15 m maximum of:

a) the edges of the of the car roof or,

b) the edges of the working station or,.

c) the edge of the car sill.

5.5.13.3.7 A warning sign or a notice about the danger of leaning over the balustrade (see 7.2.6 d)) shall be fixed to it, where appropriate.

5.5.14 Car header and car sides

If a gap can exist between the car roof and the header of a landing door or any other sides when this door is opened, the car entrance and any other sides shall be extended, over the whole width of the landing door, by a rigid vertical panel to fill the gap considered.

5.5.15 Inspection equipment

Depending on the procedure adopted for the inspection, the following shall be installed either on the car roof, inside the car, or on an inspection platform:

a) control device in conformity with 5.11.2.1.4 (inspection operation);

b) stop device in conformity with 5.11.2.2 and 7.2.6;

c) socket outlet in conformity with 5.10.5.5.2.

5.5.16 Ventilation, heating, air-conditioning

5.5.16.1 Cars with imperforate doors shall be provided with ventilation apertures in the upper and lower parts of the car.

5.5.16.2 The effective area of ventilation apertures situated in the upper part of the car shall be at least 1 % of the available car area, and the same also applies for the apertures in the lower part of the car.

The gaps round the car doors may be taken into account in the calculation of the area of ventilation holes, up to 50 % of the required effective area.

5.5.16.3 In order to allow a good ventilation of the car in case of long stop duration, ventilation apertures shall be provided.

The adjustment of these apertures may be left up to the passengers provided that all danger is avoided like, for example, by maintaining the safety distances given by EN ISO 13857:2008 between passengers and obstacles.

Ventilation apertures shall be built or arranged in such a way that it is not possible to pass a straight rigid rod 10 mm in diameter through the car walls from the inside.

5.5.16.4 All equipment for heating and air-conditioning shall be inaccessible to the users. It shall not be possible to cover openings.

5.5.17 Lighting

5.5.17.1 The car shall be provided with electrical lighting that is permanently installed ensuring a light intensity of at least 50 lx at floor level and on the control devices.

5.5.17.2 If lighting is of the incandescent type, there shall be at least two lamps connected in parallel.

5.5.17.3 In case of automatically power operated doors the light may be switched off when the car is parked at a landing with the doors closed in accordance with 5.4.8.

5.5.17.4 There shall be an automatically rechargeable emergency supply, which is capable of ensuring at least a lighting intensity of 1 lx for 1 h at the alarm initiation device and in the centre of the car 1 m above the floor. This lighting shall come on automatically upon failure of the normal lighting supply.

5.5.17.5 If the supply referred to in 5.5.17.4 is also used to feed the emergency alarm signal called for in 5.11.2.3, its capacity shall be rated accordingly.

5.5.18 Counterweight and balancing weight

5.5.18.1 The use of a balancing weight is defined in 5.9.2.1.

5.5.18.2 If the counterweight or the balancing weight incorporates filler weights, necessary measures shall be taken to prevent their displacement. To this effect the following shall be used:

a) either a frame in which the fillers are secured, or

b) if the fillers are made of metal, and if the rated speed of the lifts does not exceed 1 m/s, a minimum of two tie-rods on which the fillers are secured.

5.5.18.3 Pulleys and/or sprockets fixed to the counterweight or to the balancing weight shall have protection according to 5.6.7.

5.5.19 Running/sliding elements

Running/sliding elements (wheels, guide shoes, rollers) fixed on the vehicle and on the counterweight (or the balancing weight) shall be installed in order to ensure a straight travel, to reduce the risks of derailment or jamming and to ensure the effectiveness of the safety systems: safety gear, overspeed governor, etc.in all the normally predictable situations.

These elements are in contact with the running tracks and the guide rails defined in 5.7.2.1 and 5.7.2.2.

5.5.20 Element for maintaining the vehicle inside the dynamic envelope

In case of failure of a running/sliding element, anti-derailment elements (rollers, guide shoes, etc.) provided on the vehicle, shall ensure the vehicle is maintained inside the dynamic envelope.

Anti-derailment elements are also necessary to ensure the maintenance of the vehicle in the direction of travel or laterally in the case of eccentric loads or safety gear operation or impact against buffers. They lean on the counter-guide rails defined in 5.7.2.3.

All these devices shall have sufficient mechanical strength to maintain the vehicle within the limits of the dynamic envelop whatever the conditions. The efforts taken into account for calculation are those defined in G.2 for the structures calculation.

5.5.21 Clearance of obstacles

Depending on the place of installation, devices shall be provided on the vehicle to ensure the clearance of obstacles (e.g. small branches, bottles, stones) which could obstruct the travel.

For out-door installations “slip off devices” for removing obstacles (e.g. snow, ice) shall be applied in front of the wheels.

5.6 Suspension, compensation, overspeed protection and protection against unintended vehicle movement

5.6.1 Suspension

5.6.1.1 The vehicle and the counterweight or balancing weights shall be suspended from steel wire ropes or steel chains.

5.6.1.2 The ropes shall correspond to the following requirements:

a) the nominal diameter of the ropes shall be at least 8 mm ;

b) the tensile strength of the wires shall be:

1) 1 570 N/mm^2 or 1 770 N/mm^2 for ropes of single tensile, or

2) 1 370 N/mm^2 for the outer wires and 1 770 N/mm^2 for the inner wires of ropes of dual tensile.

c) the other characteristics (construction, extension, ovality, flexibility, tests, etc.) shall at least correspond to those specified in the relevant European Standards.

5.6.1.3 The minimum number of ropes or chains shall be two.

Ropes or chains shall be independent.

5.6.1.4 Where reeving is used the number to take into account is that of the ropes or chains and not the falls.

5.6.2 Sheave, pulley, drum and rope diameter ratios, rope/chain terminations, safety coefficients

5.6.2.1 Sheave, pulley, drum and rope

5.6.2.1.1 The ratio between the pitch diameter of sheaves, pulleys or drums and the nominal diameter of the suspension ropes shall be at least 40, regardless of the number of strands.

5.6.2.1.2 Two safety factors shall be checked for the suspension ropes:

a) the static safety factor which is the ratio between the minimum breaking load, in newtons, of one rope and the maximum force, in newtons, in this rope, when the lift is in the worst condition. This factor shall be calculated according to Annex L. In no case it shall be lower than:

1) 12, in case of traction drive with three ropes or more;

2) 16, in case of traction drive with less than three ropes;

3) 12, in case of drum drive;

b) the dynamic safety factor, which is the ratio between the minimum breaking load (in Newton) of a rope and the greatest force (in Newton), which can happen in this rope during the travel of the vehicle in the most binding situation. In all cases, this dynamic safety factor shall be greater than 5.

5.6.2.1.3 The junction between the rope and the rope termination, according to 5.6.2.2.2, shall be able to resist at least 80 % of the minimum breaking load of the rope.

5.6.2.1.4 The ends of the ropes shall be fixed to the vehicle, counterweight or balancing weight, or suspension points of the dead parts of reeved ropes by means of metal or resin filled sockets, heart shaped thimbles with at least three suitable rope grips, hand spliced eyes, ferrule secured eyes or any other system with equivalent safety.

5.6.2.1.5 The fixing of the ropes on the drums shall be carried out using a system of blocking with wedges, or using at least two clamps or any other system with equivalent safety.

5.6.2.2 Chains

5.6.2.2.1 The static safety factor shall be at least 10.

The dynamic safety factor shall be at least 5.

The safety factors are defined in the same way to that indicated in 5.6.2.1.2 for ropes.

5.6.2.2.2 The ends of each chain shall be fixed to the vehicle, counterweight or balancing weight, or suspension points of the dead parts of reeved chains by suitable terminations. The junction between the chain and the chain termination shall be able to resist at least 80 % of the minimum breaking load of the chain.

5.6.2.2.3 The chains shall be supported and guided in order to avoid all harmful friction against aggressive parts.

5.6.3 Rope traction

Rope traction shall be such that the following three conditions are fulfilled:

a) in all environmental conditions referred for the lift, the vehicle shall be maintained at floor level without slip when the car is loaded to 125 % as per 5.5.2.1 or 5.5.2.2;

b) it shall be ensured that any emergency braking causes the vehicle, whether empty or with rated load, to decelerate with a value not exceeding the setting of the buffer, including reduced stroke buffer;

c) it shall not be possible to raise the empty vehicle when the counterweight is resting on the buffers, and the lift machine is rotated in the “up” direction;

In case of traction by loop ropes, the vehicle resting on the buffers, the traction shall be limited (minimum traction is controlled as specified in 5.6.6.1 d).

The ropes shall be supported and guided in order to avoid all harmful contact.

If the ropes are supported and guided by rollers, the value of the ratio between the roller diameter and that of the ropes if the angle of deviation is lower than 4° is given by the Figure 4 below.

For deviation greater than 4 degrees, the ratio is the same as the ratio taken into account for the sheaves.

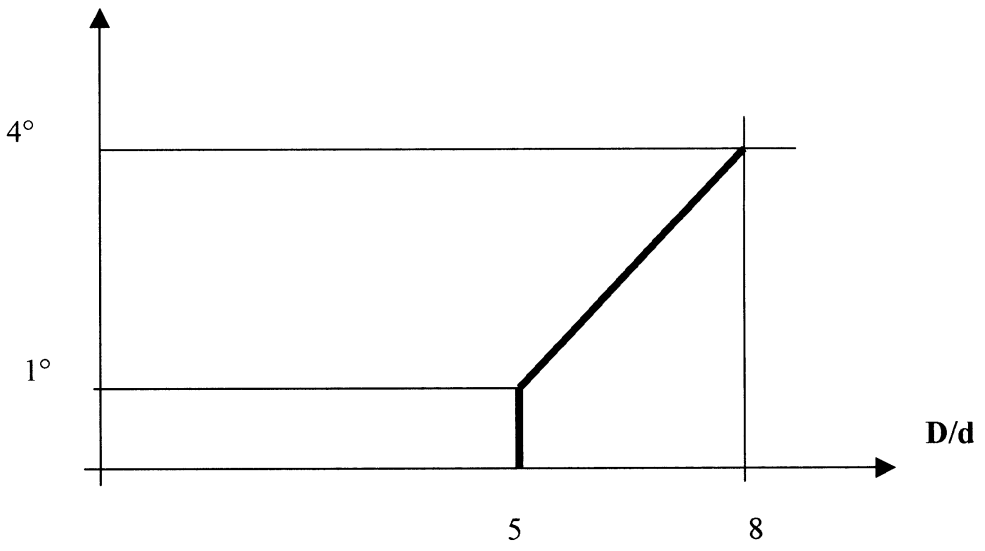

Key

D roller diameter

d rope diameter

Figure 4 — Ratio for angles of deviation less than 4

Design considerations are given in Annex K.

If the travel path changes its inclination such that the traction conditions which are unable to ensure the slipping of the ropes on the sheave in case of blocking of the vehicle (including in the worst positions), the lift shall be considered as a positive drive lift. In this case all the referred provisions for this type of pulling shall be applied (see 5.6.8.3.1, 5.7.3.2 and 5.9.9).

5.6.4 Winding up of ropes for positive drive lifts

5.6.4.1 The drum which can be used in the conditions laid down in 5.9.2.1 b) shall be helically grooved and the grooves shall be suited to the ropes used.

5.6.4.2 When the vehicle rests on its fully compressed buffers, one and a half turns of rope shall remain in the grooves of the drum.

5.6.4.3 The wrap may have up to 3 layers of ropes on the drum (e.g. if it has an independent wire rope core: WRC) if, in addition to the requirements mentioned above, the ropes wind on different places of the drum or on different drums and a spooling device is provided.

In all cases, the distance between the top layer of the wires rope on the drum and the outer edge of the drum flanges shall be at least 2,5 times the diameter of the wire rope, except in the cases where rope guards are fitted to prevent an unexpected unwinding of the wire.

5.6.4.4 The angle of deflection (fleet angle) of the ropes in relation to the grooves shall not exceed 4°.

5.6.4.5 Where a failure of the motor or a blocking of the vehicle occurs when the vehicle is descending, and if because of the inertia, the length of the ropes and of the slope, the ropes can unwind by their own weight, an anti-unwinding device shall be installed like e.g. a ropes brake or an electro-mechanical brake on the drum.

5.6.5 Distribution of load between the ropes or the chains

5.6.5.1 An automatic device shall be provided for equalizing the tension of suspension ropes or chains, at least at one of their ends.

5.6.5.2 For chains engaging with sprockets, the ends fixed to the vehicle as well as the ends fixed to the balancing weight shall be provided with such equalization devices.

5.6.5.3 For chains in the case of multiple return sprockets on the same shaft, these sprockets shall be able to rotate independently.

5.6.5.4 If springs are used to equalize the tension they shall work in compression.

5.6.5.5 In the case of two ropes or two chains suspension of the vehicle an electric safety device in conformity with 5.11.1.2 shall cause the lift to stop in case of abnormal relative extension of one rope or chain.

5.6.5.6 The devices for adjusting the length of ropes or chains shall be made in such a way that these devices cannot work themselves loose after adjustment.

5.6.6 Compensation with ropes/loop ropes

5.6.6.1 Whenever compensating ropes or pulling loop ropes are used the following shall apply:

a) tensioning pulleys shall be used;

b) the ratio between the pitch diameter of the tensioning pulleys and the nominal diameter of the compensating ropes shall be at least 30; the ratio between the pitch diameter of the tensioning pulley and the diameter of the pulling loop ropes shall be at least 40.

c) tensioning pulleys shall have protection according to 5.6.7;

d) when the tension is not given by a gravity mechanical system the maximum tension shall be checked by an electric safety device in conformity with 5.11.1.2;

e) the minimum tension shall be checked by an electric safety device in conformity with 5.11.1.2.

5.6.6.2 For lifts whose rated speed exceeds 2,5 m/s there shall be, in addition to 5.6.6.1, an anti-rebound device.

The operation of the anti-rebound device shall initiate the stopping of the lift machine by means of an electric safety device in conformity with 5.11.1.2 and allow a free displacement of the pulley

5.6.7 Protection for traction sheaves, pulleys and sprockets

5.6.7.1 For traction sheaves, pulleys and sprockets, provisions shall be made according to Table 4 to avoid:

a) bodily injury;

b) the ropes/chains leaving the pulleys/sprockets, if slack;

c) the introduction of objects between ropes/chains and pulleys/sprockets.

For lifts operating outside, precautions shall be taken to maintain the grooves of pulleys in their normal functioning state particularly with regard to ice, which may have formed on the ropes.

Table 4 — Protection for traction sheaves, pulleys and sprockets

Location of traction sheaves, pulleys and sprockets			Risk according to		
			5.6.7.1 a)	5.6.7.1 b)	5.6.7.1 c)
At the vehicle	on the car roof		**x**	**x**	**x**
	under the car floor			**x**	x
On the counterweight / balancing weight				**x**	**x**
In the machine room			**x** [b]	**x**	**x** [a]
In the pulley room			**x** [b]	**x**	**x** [a]
In the well	Headroom	above vehicle	**x**	**x**	
		beside vehicle		**x**	
	between pit and headroom			**x**	**x** [a]
	pit		**x**	**x**	**x**
At the overspeed governor and its tensioning pulley				**x**	**x** [a]
X Risk shall be taken into account.					
[a] Required only if the ropes/chains are entering the traction sheave or the pulley/sprocket horizontally or at any angle above the horizontal up to a maximum of 90°. [b] Protection shall be nip guards as a minimum.					

5.6.7.2 The devices used shall be constructed so that the rotating parts are visible, and do not hinder examination and maintenance operation. If they are perforated the gaps shall comply with EN ISO 13857:2008, Table 4.

The dismantling shall be necessary only in the following cases:

a) replacement of a rope/chain;

b) replacement of a pulley/sprocket;

c) re-cutting of the grooves.

5.6.8 Safety gear

5.6.8.1 General provisions

5.6.8.1.1 The vehicle shall be provided with a safety gear to operate only in the downward direction and capable of stopping it carrying the rated load, at the maximum tripping speed of the overspeed governor, even if the suspension devices break, by gripping the guide rail or the safety gear gripping element (see 3.1.43 for definition) and of holding the vehicle there.

A safety gear operating in the “up” direction may be used in conformity with 5.6.10.

Effectiveness of the safety gear shall be maintained for all environmental conditions and foreseeable pollution for the considered equipment.

5.6.8.1.2 In the case envisaged in 5.2.5 b), the counterweight or the balancing weight shall also be equipped with a safety gear, operating only on a downward moving counterweight or balancing weight, capable of stopping it, at the tripping speed of the overspeed governor (or if the suspension devices break in the specific case of 5.6.8.3.1), by gripping its guide rails or safety gear gripping element, and of holding the counterweight or the balancing weight there.

5.6.8.1.3 A safety gear is regarded as a safety component and shall be verified according to the requirements in F.2.

5.6.8.2 Safety gear conditions of use

5.6.8.2.1 Vehicle safety gear shall be of the progressive type.

5.6.8.2.2 The safety gear of the counterweight or balancing weight shall be of the progressive type.

5.6.8.3 Methods of tripping

5.6.8.3.1 The safety gear of the vehicle, counterweight or balancing weight shall each be tripped by its own overspeed governor.

When the rated speed does not exceed 1 m/s, the safety gear of a counterweight or balancing weight may be tripped by the failure of the suspension gear or by a safety rope.

This provision also applies to the positive drive lifts during a stoppage due to detection device of a slack rope referred to in 5.9.9.

For lifts having a reduced guided over-travel or with reduced stroke buffers, the safety gear shall also be tripped by the slowdown monitoring referred to in 5.9.8.

5.6.8.3.2 Safety gears shall be tripped by:

a) a wire rope which drives the overspeed governor (5.6.9.2), or by

b) other devices regarded as safety components and verified with the overspeed governor according to the requirements in F.3.

5.6.8.4 Retardation

The average retardation a_i in the direction of travel in the event of safety gear operation with the rated load shall be between 0,1 g and a maximum value such that the average value of the vertical component a_V of the retardation is less than 1,0 g.

Furthermore, for all loading cases, the average value of the horizontal component a_h of the retardation shall remain less than 0,5 g.

These requirements shall be maintained in case of free fall and counterweight attached.

5.6.8.5 Release

5.6.8.5.1 When a safety gear has tripped its release shall require the intervention of a competent person.

5.6.8.5.2 The release and automatic reset of a safety gear on the vehicle, counterweight or balancing weight shall only be possible by raising the vehicle, counterweight or balancing weight.

5.6.8.6 Constructional conditions

5.6.8.6.1 Jaws or blocks of safety gears shall not be used as guide shoes.

5.6.8.6.2 For safety gear of the instantaneous type with buffered effect, the design of the buffering systems shall be of the energy accumulation type with buffered return movement or the energy dissipation type, satisfying the requirements of 5.7.4.2 or 5.7.4.3.

5.6.8.6.3 If the safety gear is adjustable, the final setting shall be sealed.

5.6.8.7 Inclination of the car floor

When the vehicle safety gear operates, the floor of the car without or with the load uniformly distributed shall not incline more than 5 % from its normal position.

5.6.8.8 Electrical checking

When the vehicle safety gear is engaged, an electric safety device in conformity with 5.11.1.2, mounted on the vehicle shall initiate the stopping of the machine before or at the moment of safety gear operation.

5.6.9 Overspeed governor

5.6.9.1 Operation of the overspeed governor

5.6.9.1.1 Tripping of the overspeed governor for the vehicle safety gear shall occur at a speed of at least equal to 115 % of the rated speed and less than:

a) 1,5 m/s for instantaneous safety gears with buffered effect and for progressive safety gear used for rated speeds not exceeding 1,0 m/s, or

b) 1,25 v + 0,25/v in metres per second for progressive safety gear for rated speeds exceeding 1,0 m/s.

5.6.9.1.2 For lifts with very heavy rated loads and low rated speeds, the overspeed governor shall be specially designed for this purpose.

It is recommended to choose a tripping speed as close as possible to the lower limit indicated in 5.6.9.1.1.

5.6.9.1.3 The tripping speed of an overspeed governor for a counterweight or balancing weight safety gear shall be higher than that for the vehicle safety gear according to 5.6.9.1.1, not, however exceeding it by more than 10 %.

5.6.9.1.4 The direction of rotation, corresponding to the operation of the safety gear, shall be marked on the overspeed governor.

5.6.9.2 Overspeed governor driven by rope

5.6.9.2.1 The tensile force in the overspeed governor rope produced by the governor, when tripped, shall be at least the greater of the following two values:

a) twice that necessary to engage the safety gear, or

b) 300 N.

Overspeed governors using only traction to produce the force shall have grooves which:

c) have been submitted to an additional hardening process, or

d) have an undercut in accordance with K.2.3.1.

5.6.9.2.2 The minimum breaking load of the rope shall be related by a safety factor of at least 8 to the tensile force produced in the rope of the overspeed governor when tripped taking into account a friction factor μ_{max} equal to 0,2 for traction type overspeed governor.

5.6.9.2.3 The nominal rope diameter shall be at least 6 mm.

5.6.9.2.4 The ratio between the pitch diameter of the pulleys for the overspeed governor rope and the nominal rope diameter shall be at least 30.

5.6.9.2.5 The overspeed governor rope shall be tensioned by a tensioning pulley. This pulley (or its tensioning weight) shall be guided.

5.6.9.2.6 During the engagement of the safety gear, the overspeed governor rope and its attachments shall remain intact, even in the case of a braking distance greater than normal.

5.6.9.2.7 The overspeed governor rope shall be easily detachable from the safety gear.

5.6.9.2.8 The rope shall be guided or supported everywhere it is necessary in order not to be damaged.

5.6.9.3 Mechanical overspeed governor not driven by rope

Mechanical overspeed governors not driven by rope shall have the same safety as for those driven by rope.

5.6.9.4 Programmable electronic overspeed governor

Programmable electronic overspeed governor shall fulfil the requirements of 5.11.1.2. The detection of overspeed and the activation of the safety gear (for conditions, see 5.6.9.1.1) shall conform to SIL 3.

To hold off the safety gear, in normal operation, shall require a continuous flow of current. In case of overspeed the programmable electronic overspeed governor shall cut the current of an electro-mechanical system which triggers the safety gear with a force defined in 5.6.9.2.1 a) and b).

5.6.9.5 Response time

The response time of the overspeed governor before tripping shall be sufficiently short not to reach 150 % of the rated speed before the moment of safety gear operation.

5.6.9.6 Accessibility

5.6.9.6.1 The overspeed governor shall be accessible and reachable for inspection and maintenance.

5.6.9.6.2 If located in the well the overspeed governor shall be accessible and reachable from outside the well.

5.6.9.6.3 The requirement of 5.6.9.6.2 does not apply if the following three conditions are fulfilled:

a) the tripping of the overspeed governor according to 5.6.9.7 is effected by means of a remote control, except cableless, from outside the well whereby an involuntary tripping is not effected and the actuation device is not accessible to unauthorized persons, and

b) the overspeed governor shall be accessible for inspection and maintenance from the vehicle or from the pit, and

c) the overspeed governor returns after tripping automatically into the normal position, as the vehicle, counterweight or balancing weight is moved in the upward direction.

However the electrical parts may return into the normal position by remote control from the outside of the well which shall not influence the normal function of the overspeed governor.

5.6.9.7 Tripping of the overspeed governor

During checks or tests it shall be possible to operate the safety gear at a lower speed than that indicated in 5.6.9.1.1 by tripping the overspeed governor in a safe way.

If the overspeed governor is adjustable, the final setting shall be sealed.

5.6.9.8 Electrical checking

5.6.9.8.1 The overspeed governor or another device shall, by means of an electric safety device in conformity with 5.11.1.2, initiate the stopping of the lift machine before the vehicle speed, either up or down, reaches the tripping speed of the governor.

However, for rated speeds not exceeding 1 m/s, this device may operate at the latest at the moment when the tripping speed of the governor is reached.

5.6.9.8.2 If after release of the safety gear (5.6.8.5.2) the overspeed governor does not automatically reset itself, an electric safety device in conformity with 5.11.1.2 shall prevent the starting of the lift while the overspeed governor is not in the reset position. This device shall, however, be made inoperative in the case provided for in 5.11.2.1.5 c).

5.6.9.8.3 If the overspeed governor is a mechanical type driven by a rope, the breakage or excessive rope stretch of this rope shall cause the motor to stop by means of an electric safety device in conformity with 5.11.1.2.

For any other type of overspeed governor, any fault shall be detected and shall cause the lift machine to stop. In this case, the overspeed governor shall be designed as an electric safety device in conformity with 5.11.1.2.

5.6.9.8.4 The overspeed governor is regarded as a safety component and shall be verified according to the requirements in F.3.

5.6.10 Ascending vehicle overspeed protection means

5.6.10.1 When the risk exists (e.g. lift with counterweight), the lift shall be provided with ascending vehicle overspeed protection means conforming to the following:

It shall be used:

a) a specific device for inclined application, or

b) a device type tested for a vertical lift. In this case the preservation of all its efficiency shall be assessed for an “inclined” use, with eventually a change of the inclination, and for the environmental conditions.

5.6.10.2 The means, comprising speed monitoring and speed reducing elements, shall detect uncontrolled movement of the ascending vehicle at a minimum 115 % of the rated speed, and maximum as defined in 5.6.9.1.3, and shall cause the vehicle to stop, or at least reduce its speed to that for which the counterweight buffer is designed.

5.6.10.3 The means shall be capable of performing as required in 5.6.10.2 without assistance from any lift component that, during normal operation, controls the speed or retardation, or stops the vehicle, unless there is built-in redundancy.

A mechanical linkage to the vehicle, whether or not such linkage is used for any other purpose, may be used to assist in this performance.

5.6.10.4 During the stopping phase of the vehicle, in all cases of loading the average values of the retardation components shall be less than:

a) 1,0 g for the vertical component;

b) 0,5 g for the horizontal component.

5.6.10.5 The means shall act:

a) to the vehicle, or

b) to the counterweight, or

c) on the rope system (traction or compensating), or

d) on the sheave (e.g. on the sheave directly or on the same shaft in the immediate vicinity of the sheave).

5.6.10.6 The means shall operate an electric safety device in conformity with 5.11.1.2 if it is engaged.

5.6.10.7 When the means has been activated its release shall require the intervention of a competent person.

5.6.10.8 The release of the means shall not require access to the vehicle or the counterweight.

5.6.10.9 After its release, the means shall be in a condition to operate.

5.6.10.10 If the means requires external energy to operate, the absence of energy shall cause the lift to stop and keep it stopped. This does not apply for guided compressed springs.

5.6.10.11 The speed monitoring element of the lift to cause the ascending vehicle overspeed protection means to actuate shall be, either:

a) a governor conforming to the requirements of 5.6.9, or

b) a device conforming to 5.6.9.1.1, 5.6.9.1.2, 5.6.9.1.3, 5.6.9.5, 5.6.9.6.1, 5.6.9.7, 5.6.9.8.2, and where equivalence to 5.6.9.1.4, 5.6.9.2.1, 5.6.9.2.4 and 5.6.9.8.3 is ensured.

5.6.10.12 The ascending vehicle overspeed protection means is regarded as a safety component and shall be verified according to the requirements in F.6.

5.6.11 Protection against unintended vehicle movement

5.6.11.1 Lifts shall be provided with a means to stop unintended vehicle movement away from the landing with the landing door not in the locked position and the car door not in the closed position, as a result of failure in any single component of the lift machine or drive control system upon which the safe movement of the vehicle depends, except failure of the suspension ropes and the traction sheave or drum or sprockets of the machine.

5.6.11.2 The means shall detect unintended movement of the vehicle and cause the vehicle to stop and keep it stopped.

5.6.11.3 The means shall be capable of performing as required without assistance from any lift component that, during normal operation, controls the speed or retardation, stops the vehicle or keeps it stopped, unless there is built-in redundancy and correct operation is self-monitored.

In the case of using the machine brake, self-monitoring implies verification of correct lifting or dropping of the mechanism or verification of braking force. If a failure is detected, next normal start of the lift shall be prevented.

Self-monitoring is subject to type examination.

5.6.11.4 The stopping element of the means shall act:

a) on the vehicle, or

b) on the counterweight, or

c) on the rope system (suspension or compensating), or

d) on the traction sheave (e.g. on the sheave directly or on the same shaft in the immediate vicinity of the sheave).

The stopping element of the means, or the means preventing the vehicle movement may be common with those used for:

— preventing overspeed in down direction;

— preventing ascending vehicle overspeed (5.6.10).

The stopping elements of the means may be different for the down direction and for the up direction.

5.6.11.5 In all conditions, with any load in the car up to 100 % of rated load, the means shall stop the vehicle within.a distance that ensures a free distance of:

a) 0,60 m between the side edges of the frames of the landing door and of the car door and

b) 1,00 m between the floor of the car and the top edge of the frame of the landing door or between the floor of the landing and the top edge of the frame of the car door.

5.6.11.6 The unintended movement of the vehicle shall be detected by at least one switching device.

This switching device shall:

a) be a safety contact in conformity with 5.11.1.2.2, or

b) be connected in such a way as to satisfy the requirements for safety circuits in 5.11.1.2.3, or

c) satisfy the requirements of 5.11.1.3.3.

5.6.11.7 The means shall operate an electric safety device in conformity with 5.11.1.2 if it is engaged.

NOTE This can be common to switching device of 5.6.11.6.

5.6.11.8 When the means has been activated or the self-monitoring has indicated a failure of the stopping element of the means, its release or the reset of the lift shall require the intervention of a competent person.

5.6.11.9 The release of the means shall not require the access to the vehicle or the counterweight

5.6.11.10 After its release, the means shall be in a condition to operate.

5.6.11.11 If the means requires external energy to operate, the absence of energy shall cause the lift to stop and keep it stopped. This does not apply for guided compressed springs.

5.6.11.12 The unintended vehicle movement means is regarded as a safety component and shall be verified according to the requirements in F.7.

5.7 Running tracks, guide rails, counter-guide rails and safety gear operating element – Buffers – Final limit switches

5.7.1 General provisions concerning the running tracks, guide rails, counter-guide rails and safety gear gripping element

5.7.1.1 Mechanical strength

The mechanical strength of the running tracks, the guide rails, the counter-guide rails and the safety gear gripping element, their joints and attachments, shall be sufficient to withstand the loads and forces imposed on them in order to ensure a safe operation of the lift.

The aspects of safe operation of the lift are:

a) vehicle, counterweight or balancing weight supporting and guidance shall be ensured.

b) deflections shall be limited to such an extent, that due to them:

   1) unintended unlocking of the doors shall not occur ;

   2) operation of the safety devices shall not be affected, and

   3) collision of moving parts with other parts shall not be possible.

5.7.1.2 Permissible stresses and deflections for T-profile guide rails

5.7.1.2.1 The permissible stresses shall be determined by:

$$\sigma_{\text{perm}} = \frac{R_{\text{m}}}{S_{\text{t}}}$$

where

R_{m} the tensile strength in newtons per square millimetre;

S_{t} the safety factor;

σ_{perm} the permissible stress in newtons per square millimetre.

The safety factor shall be taken from Table 5.

Table 5 — Safety factors for guide rails

Load cases	Elongation (A_5)	Safety factor
Normal use - loading	$A_5 > 12$ %	2,25
	8 % ≤ A_5 ≤ 12 %	3,75
Safety gear operation	$A_5 > 12$ %	1,80
	8 % ≤ A_5 ≤ 12 %	3,00

Materials with elongations less than 8 % are regarded as too brittle and shall not be used.

For guide rails in accordance with ISO 7465:2007, the values of σ_{perm} given in Table 6 may be used.

Table 6 — Permissible stresses σ_{perm}

Load cases	R_m		
	370	440	520
Normal use - loading	165 N/mm^2	195 N/mm^2	230 N/mm^2
Safety gear operation	205 N/mm^2	244 N/mm^2	290 N/mm^2

5.7.1.2.2 For T-profile guide rails the maximum calculated permissible deflections are:

a) 5 mm in both directions for vehicle, counterweight or balancing weight guide rails on which safety gears are operating ;

b) 10 mm in both directions for guide rails of counterweight or balancing weight without safety gears.

5.7.1.3 Fixing

The fixing of the guide rails to their brackets and to the building shall permit compensation, either automatically or by simple adjustment, of effects due to normal settling of the building or shrinkage of concrete.

A rotation of the attachments by which the guide rails could be released shall be prevented.

5.7.2 Travel and guiding of the vehicle, counterweight or balancing weight

5.7.2.1 Running tracks

The vehicle, the counterweight or balancing weight shall be supported by at least a rigid element on which they run and which has a resistance according to the requirements of 5.7.1.

These running tracks shall ensure a ride without shocks to cause the loss of balance to persons.

When the travel path includes several sections of different inclinations, the following provisions shall apply:

a) The curve of transition between 2 successive sections shall not introduce acceleration vector higher than 0,1 g and in all cases ensure the operation of the safety gear.

b) If the positions of the running tracks do not allow the tolerances fixed in 5.5.3.1.2 to be met to ensure in all situations the vehicle is maintained inside its dynamic envelope, an automatic device for maintaining that the floor remains horizontal shall be installed. The functioning of this device shall be continuously monitored by an electric safety device complying with 5.11.1.3.1.

5.7.2.2 Guide rails

To avoid the risk of derailment or trapping, lateral guiding of the vehicle and counterweight or balancing weight on their trajectory is necessary and shall be effected by mechanical and rigid elements having strength according to 5.7.1.

5.7.2.3 Counter-guide rail

The maintaining of the vehicle in the limits of the dynamic envelope (anti-lifting) shall be effected by mechanical rigid elements from which the strength is in conformity with the requirements of 5.7.1.

5.7.2.4 Safety gear gripping element

The safety gear shall operate on a similar element used for the approval procedure and to be maintained in that state.

When this element is rigid, it can also effect the lateral guiding of the vehicle.

5.7.2.5 Multi-function element

Only one single element can fulfil one or several functions defined in 5.7.2.

The Annex G gives information on the forces to take into account for calculation.

5.7.3 Vehicle and counterweight buffers

5.7.3.1 Lifts shall be provided with buffers at the bottom limit of travel of the vehicle and counterweight.

The acting point(s) of the buffer(s) below the projection of the vehicle shall be made obvious by an obstacle (pedestal) of a height so that 5.2.7.3 is fulfilled. For buffers with the centre of the acting area within 0,15 m from the guide rails and similar fixed devices, excluding walls, these devices are regarded as obstacles.

5.7.3.2 In addition to the requirements of 5.7.3.1 positive drive lifts and lifts pulled by loop ropes without counterweight shall be provided with buffer devices on the vehicle or in the well to function at the top limit of the travel. In this case, the impact zones shall be identified and protected.

Traction drive lifts with front-mounted doors shall be equipped with buffers at the top of the well or on the vehicle.

In both cases the buffers referred to in 5.7.3.1 for the counterweight (if it exists) shall be substituted by a reduced stroke buffer.

5.7.3.3 Energy accumulation type buffers, with linear and nonlinear characteristics, shall only be used if the rated speed of the lift does not exceed 1 m/s.

5.7.3.4 Energy accumulation type buffers with buffered return movement shall only be used if the rated speed of the lift does not exceed 1,6 m/s.

5.7.3.5 Energy dissipation type buffers can be used whatever the rated speed of the lift.

5.7.3.6 Buffers subjected to be stressed at the end of the travel during normal lift operation are permitted if the following three conditions are fulfilled:

a) the buffers are of the energy dissipation type;

b) in normal operation the conditions of the slowdown clarified in 5.9.12 are respected;

c) the electric device referred to in 5.7.4.3.4 shall verify that the buffer has come back to its extended position when the vehicle is leaving the landing for a new travel.

5.7.3.7 The energy accumulation type buffers with nonlinear characteristics and/or with buffered return movement and energy dissipation type buffers are regarded as safety components and shall be verified according to the requirements in F.4.

5.7.4 Stroke of vehicle and counterweight buffers

5.7.4.1 Energy accumulation type buffers

5.7.4.1.1 Buffers with linear characteristics

5.7.4.1.1.1 The total possible stroke of the buffers shall be designed to satisfy the following conditions:

a) hitting the vehicle buffer with a rated load in the vehicle, in case of free fall with a speed of 115 % of the rated speed,

   1) the average value of the vertical component of the retardation shall not be more than 1,0 g,

   2) the average value of the horizontal component of the retardation shall not be more than 0,5 g.

b) However, the stroke shall not be less than 65 mm. If the instantaneous values above are greater than:

   1) 2,5 g for the vertical component,

   2) 1,0 g for the horizontal component,

   their duration shall not be longer 0,04 s.

5.7.4.1.1.2 Buffers shall be designed to cover the stroke defined in 5.7.4.1.1.1 under a static load of between 2,5 times and 4 times the sum of the mass of the vehicle and its rated load (or the mass of the counterweight).

5.7.4.1.2 Buffers with nonlinear characteristics

5.7.4.1.2.1 Energy accumulation type buffers with non-linear characteristics shall fulfil the following requirements:

a) hitting the vehicle buffer with a rated load in the vehicle, in case of free fall with a speed of 115 % of the rated speed:

   1) the average value of the vertical component of the retardation shall not be more than 1,0 g,

   2) the average value of the horizontal component of the retardation shall not be more than 0,5 g.

b) if the instantaneous values above are greater than:

   1) 2,5 g for the vertical component;

   2) 1,0 g for the horizontal component,

   their duration shall not be longer than 0,04 s.

c) the return speed of the vehicle shall not exceed 1 m/s ;

d) there shall be no permanent deformation after actuation.

5.7.4.1.2.2 The term “fully compressed”, mentioned in 5.2.7.2.1, 5.2.7.2.2, 5.2.7.4.3 and 5.6.4.2 means a compression of 90 % of the installed buffer height.

The value of a_h (horizontal component) shall be verified by calculation.

5.7.4.2 Energy accumulation type buffers with buffered return movement

The requirements of 5.7.4.1 apply to this type of buffer.

5.7.4.3 Energy dissipation type buffers

5.7.4.3.1 The total possible stroke of the buffers shall be designed to satisfy the conditions defined in 5.7.4.3.3.

5.7.4.3.2 When the slowdown of lift at the ends of its travel is monitored according to 5.9.8, the speed at which the vehicle (or the counterweight) comes into contact with the buffers may be used instead of the rated speed, when calculating the buffer stroke according to 5.7.4.3.1. However, the stroke shall not be less than one half of the stroke calculated according to 5.7.4.3.1.

In any event, the stroke shall not be less than 0,42 m.

5.7.4.3.3 Energy dissipation type buffers shall fulfil the following requirements:

a) hitting the vehicle buffer with a rated load in the vehicle, in case of free fall with a speed of 115 % of the rated speed:

   1) the average value of the vertical component of the retardation shall be equal or less than 1,0 g;

   2) the average value of the horizontal component of the retardation shall be equal or less than 0,5 g;

b) if the retardation values above are greater than:

   1) 2,5 g for the vertical component or

2) 1,0 g for the horizontal component;

their duration shall not be longer than 0,04 s.

c) there shall be no permanent deformation after actuation.

5.7.4.3.4 The normal operation of the lift shall depend on the return of the buffers to their normal extended position after operation. The device for checking this shall be an electric safety device in conformity with 5.11.1.2.

For buffers subject to be stressed at the end of the travel during normal lift operation (5.7.3.6), the electric device shall become over-ridden when the buffer gets compressed by the vehicle (buffer compression zone). The length of the buffer compression zone is equal to the buffer stroke plus a sufficient length in order to verify that the buffer has come back to its extended position when the vehicle has left the landing for a new travel.

5.7.4.3.5 Buffers, if hydraulic, shall be so constructed that the fluid level can easily be checked.

5.7.5 Final limit switches

5.7.5.1 General

Final limit switches shall be provided.

Final limit switches shall be set to function as close as possible to the terminal floors, without risk of accidental operation.

Except for the lifts with front-mounted doors, they shall operate before the vehicle (or counterweight if there is one) comes into contact with the buffers. The action of the final limit switches shall be maintained while the buffers are compressed.

5.7.5.2 Actuation of the final limit switches

5.7.5.2.1 Separate actuating devices shall be used for normal terminal stopping and final limit switches.

5.7.5.2.2 In the case of positive drive lifts, actuation of the final limit switches shall be effected:

a) by a device linked to the movement of the machine, or

b) by the vehicle and by the balancing weight, if there is one, at the top of the well, or

c) if there is no balancing weight, by the vehicle at the top and the bottom of the well.

5.7.5.2.3 In the case of traction drive lifts, actuation of the final limit switches shall be effected:

a) directly by the vehicle at the top and bottom of the well, or

b) indirectly by a device which is linked to the vehicle, e.g. by a rope, belt or chain.

In Case b), breakage of or slack in this linkage shall cause the machine to stop by means of an electric safety device in conformity with 5.11.1.2.

5.7.5.3 Method of operation of final limit switches

5.7.5.3.1 The final limit switches shall:

a) for positive drive lifts, open directly by positive mechanical separation of the circuits feeding the motor and brake in accordance with 5.9.4.2.3.

b) for traction drive lifts, single or two speed, either:

1) open circuits according to a) above, or

2) open by an electric safety device in conformity with 5.11.1.2 the circuit directly supplying the coils of the two contactors in accordance with 5.9.4.2.3, 5.9.7.2 and 5.10.2.1.1;

c) in the case of variable voltage or continuously variable speed lifts, cause the rapid stopping of the machine, i.e. in the shortest time compatible with the system.

5.7.5.3.2 After the operation of the final limit switches, the return to service of the lift shall not occur automatically.

5.8 Clearances between vehicle and wall facing the vehicle entrance, and between car, counterweight or balancing weight

5.8.1 General provision

The operational clearances specified in the standard shall be maintained not only during the examination and tests before the lift is put into service, but also throughout the life of the lift.

These clearances are specified beyond the dynamic envelope of the vehicle.

The following requirements are illustrated in Figures 5 and 6.

5.8.2 Clearances between vehicle and wall facing the vehicle entrance

5.8.2.1 The horizontal distance between the inner surface of the lift well and the sill, door frame of the vehicle or closing edge of vehicle sliding doors shall not exceed 0,15 m.

The distance given above:

a) may be extended to 0,20 m throughout the travel on goods passenger lifts in which the landing doors are vertically sliding;

b) is not limited if the vehicle is provided with a mechanically locked door, which can only be opened in the unlocking zone of a landing door.

The operation of the lift shall automatically depend on the locking of the corresponding vehicle door except in the cases covered in 5.4.7.2.2. This locking shall be proved by an electric safety device in conformity with 5.11.1.2.

5.8.2.2 The horizontal distance between the sill of the vehicle and sill of the landing doors shall not exceed 35 mm.

5.8.2.3 The horizontal distance between the vehicle door and the closed landing doors or the access distance between the doors during the whole of their normal operation shall not exceed 0,12 m over a height of 1,80 m measured from the sill.

5.8.2.4 In the case of the combination of a hinged landing door and a folding vehicle door it shall not be possible to place a ball with a diameter of 0,15 m in any gap between the closed doors.

5.8.3 Clearances between vehicle, counterweight or balancing weight

The vehicle and its associated components shall be at a distance of at least 50 mm from the counterweight or balancing weight (if there is one) and its associated components.

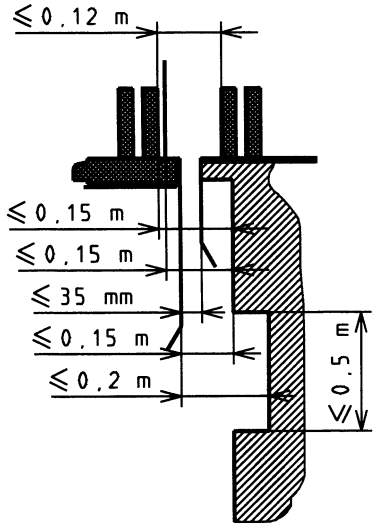

Figure 5 — Clearances between vehicle and wall facing the vehicle entrance

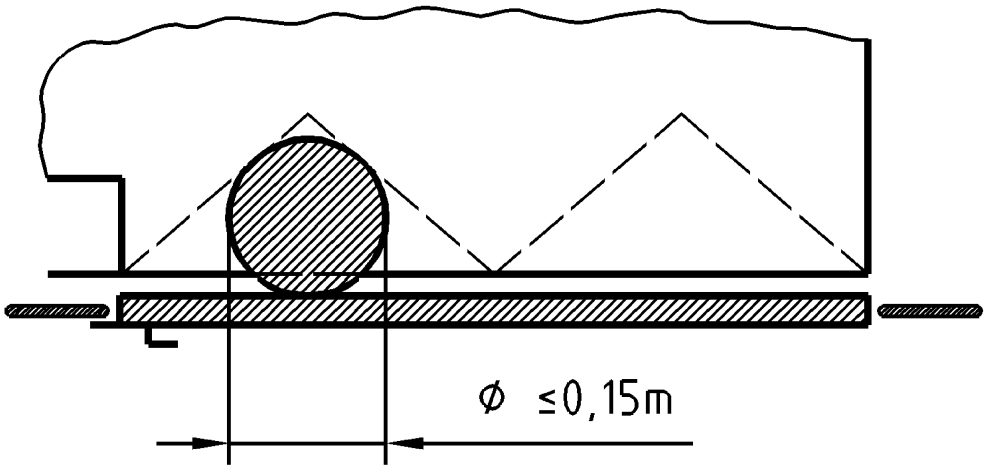

Figure 6 — Hinged landing door and folding vehicle door – Gap

5.9 Lift machine

5.9.1 General provision

Each lift shall have at least one machine of its own.

5.9.2 Drive of the vehicle and the counterweight or balancing weight

5.9.2.1 The following two methods of drive are permissible:

a) by traction (use of sheaves and ropes);

b) by positive drive, i.e.:

1) use of a drum and ropes (rated speed not more than 1,00 m/s in general, but up to 2,50 m/s for constant inclination), or

2) use of sprockets and chains (rated speed not more than 1,00 m/s).

Counterweights shall not be used. The use of a balancing weight is permitted.

The calculations of the driving elements shall take into account the possibility of the counterweight or the vehicle resting on its buffers.

5.9.2.2 Use may be made of belts for coupling the motor or motors to the component on which the electro-mechanical brake (5.9.4.1.2) operates. In this case a minimum of two belts shall be used.

5.9.3 Use of overhung pulleys or sprockets

Devices according to 5.6.7 shall be provided.

5.9.4 Braking system

5.9.4.1 General provisions

5.9.4.1.1 The lift shall be provided with a braking system, which operates automatically:

a) in the event of loss of the mains power supply;

b) in the event of the loss of the supply to control circuits.

5.9.4.1.2 The braking system shall have an electro-mechanical brake (friction type), but may, in addition, have other braking means (e.g. electric).

5.9.4.2 Electro-mechanical brake

5.9.4.2.1 This brake on its own shall be capable of stopping the machine when the vehicle is travelling downward at rated speed and with the rated load plus 25 %.

Therefore, in all cases of loading not exceeding the rated load and whatever the conditions of stopping, the average value of the horizontal component a_h of the retardation shall be lower than 0,25 g and the average value of the vertical component lower than 1,0 g.

All the mechanical components of the brake which take part in the application of the braking action on the drum or disk shall be installed in two sets. If one of the components is not working a sufficient braking effort to slow down the vehicle, travelling downwards at rated speed and with rated load shall continue to be exercized.

Any solenoid plunger shall be considered as a mechanical part, but any solenoid coil shall not.

5.9.4.2.2 The component on which the brake operates shall be coupled to the traction sheave or drum or sprocket by direct and positive mechanical means.

5.9.4.2.3 To hold off the brake, in normal operation, shall require a continuous flow of current.

The interruption of this current shall be effected by at least two independent electrical devices, whether or not integral with those, which cause interruption of the current feeding the lift machine.

If, while the lift is stationary, one of the contactors has not opened the main contacts, further movement of the vehicle shall be prevented at the latest at the next change in the direction of motion.

When the motor of the lift is likely to function as a generator, it shall not be possible for the electric device operating the brake to be fed by the driving motor.

Braking shall become effective without supplementary delay after opening of the brake release circuit.

NOTE The use of a diode or capacitor connected directly to the terminals of the brake coil is not considered as a means of delay.

5.9.4.2.4 Any machine fitted with a manual emergency operating device (5.9.5.1) shall be capable of having the brake released by hand and require a constant effort to keep the brake open.

5.9.4.2.5 The brake shoe or pad pressure shall be exerted by guided compression springs or weights.

5.9.4.2.6 Band brakes shall not be used.

5.9.4.2.7 Brake linings shall be incombustible.

5.9.5 Emergency operation

5.9.5.1 If the manual effort required moving the vehicle in the upward direction with its rated load does not exceed 400 N the machine shall be provided with a manual means of emergency operation allowing the vehicle to be moved to a landing. If the means for moving the vehicle can be driven by the lift moving, then it shall be a smooth spokeless wheel.

If the wheel is removable, it shall be located in an easily accessible place in the machine room. It shall be suitably marked if there is any risk of confusion as to the machine for which it is intended.

If the means is removable or can be disengaged from the machine, an electric safety device in conformity with 5.11.1.2 shall be actuated, at the latest when the when the means is about to be coupled with the machine

5.9.5.2 It shall be possible to check easily whether the vehicle is in an unlocking zone. This check may be made, for example, by means of marks on the suspension or governor ropes. See also 5.3.6.2 c).

5.9.5.3 If the effort defined in 5.9.5.1 is greater than 400 N, a means of emergency electrical operation shall be provided in accordance with 5.11.2.1.5.

This means shall be located in the relevant machinery space:

a) machine room (5.3.3), or

b) machinery cabinet (5.3.5.2), or

c) on the emergency and tests panel(s) (5.3.6).

5.9.6 Speed

The speed of the lift car, half loaded, in downward motion, in mid-travel, excluding all acceleration and retardation periods, shall not exceed the rated speed by more than 5 %, when the supply is at its rated frequency, and the motor voltage is equal to the rated voltage of the equipment

This tolerance is also applicable for the speed in the case of:

a) re-levelling (5.11.2.1.3 b));

b) inspection operation (5.11.2.1.4.2 d));

c) emergency electrical operation (5.11.2.1.5 e)).

NOTE It is good practice that in the above conditions the speed is not lower than a value 8 % below the rated speed.

5.9.7 Stopping the machine and checking its stopped condition

5.9.7.1 General provisions

The stopping of the machine by means of an electric safety device, in conformity with 5.11.1.2, shall be controlled as detailed below.

5.9.7.2 Motors supplied directly from AC or DC mains

The supply shall be interrupted by two independent contactors, the contacts of which shall be in series in the supply circuit. If, while the lift is stationary, one of the contactors has not opened the main contacts, further movement of the vehicle shall be prevented at the latest at the next change in the direction of motion.

5.9.7.3 Drive using a “Ward-Leonard” system

5.9.7.3.1 Excitation of the generator supplied by classical elements

Two independent contactors shall interrupt, either:

a) the motor generator loop, or

b) the excitation of the generator, or

c) one the loop and the other the excitation of the generator.

If, while the lift is stationary, one of the contactors has not opened the main contacts, further movement of the vehicle shall be prevented, at the latest at the next change in direction of motion.

In cases b) and c) effective precautions shall be taken to prevent the rotation of the motor in the case of a residual field, if any, in the generator (e.g. suicide circuit).

5.9.7.3.2 Excitation of the generator supplied and controlled by static elements

One of the following methods shall be used:

a) the same methods as specified in 5.9.7.3.1;

b) a system consisting of:

1) a contactor interrupting the excitation of the generator or the motor generator loop.

The coil of the contactor shall be released at least before each change in direction of motion. If the contactor does not release, any further movement of the lift shall be prevented, and

2) a control device blocking the flow of energy in the static elements, and

3) a monitoring device to verify the blocking of the flow of energy each time the lift is stationary.

If, during a normal stopping period, the blocking by the static elements is not effective, the monitoring device shall cause the contactor to release and any further movement of the lift shall be prevented.

Effective precautions shall be taken to prevent the rotation of the motor in the case of a residual field, if any, in the generator (e.g. suicide circuit).

5.9.7.4 AC or DC motor supplied and controlled by static elements

One of the following methods shall be used:

a) two independent contactors interrupting the current to the motor.

If, while the lift is stationary, one of the contactors has not opened the main contacts, any further movement shall be prevented, at the latest at the next change in direction of motion;

b) a system consisting of:

1) a contactor interrupting the current at all poles.

The coil of the contactor shall be released at least before each change in direction. If the contactor does not release, any further movement of the lift shall be prevented, and

2) a control device blocking the flow of energy in the static elements, and

3) a monitoring device to verify the blocking of the flow of energy each time the lift is stationary.

If, during a normal stopping period, the blocking of the flow of energy by the static elements is not effective, the monitoring device shall cause the contactor to release and any further movement of the lift shall be prevented.

c) PESSRAL consisting of a controlling stage and a stage removing the power which can cause rotation of the motor together fulfilling SIL3 requirements as given in 5.11.1.3.3;

d) An adjustable speed electrical power drive system with a safe torque off function according to EN 61800-5-2:2007, 4.2.2.2, fulfilling SIL3 requirements.

5.9.7.5 Control devices and monitoring devices

Control devices according to 5.9.7.3.2 b) 2) or 5.9.7.4 b) 2), and monitoring devices according to 5.9.7.3.2 b) 3) or 5.9.7.4 b) 3) do not need to be safety circuits according to 5.11.1.2.3.

These devices shall only be used provided the requirements of 5.11.1 are met to achieve comparability to 5.9.7.4 a).

5.9.8 Monitoring the slowdown of the machine

5.9.8.1 In case of use of reduced stroke buffers the slowdown monitoring is required (5.7.4.3.2). Devices shall check that the slowdown is effective before arrival at terminal landings.

5.9.8.2 If the slowdown is not effective these devices shall:

a) cause the vehicle speed to be reduced in such a way that:

1) any contact, except with the buffers, shall be avoided, and

2) if the vehicle or the counterweight comes into contact with the buffers, the striking speed shall not exceed that for which the buffers were designed;

b) in order that in all cases the above conditions will be respected, for the lifts with front-mounted doors, if the slowdown referred to in a) is not effective (in case of serious mechanical failure), a device shall cause the tripping of the safety gear of the vehicle.

5.9.8.3 If the device checking the slowdown is not independent of the direction of travel, a device shall check that the movement of the vehicle is in the intended direction.

5.9.8.4 If these devices, or some of them, are placed in the machine room:

a) they shall be operated by a device directly coupled to the vehicle;

b) the information relating to the vehicle position shall not depend on devices driven by traction, friction, or by synchronous motors;

c) if a connection by tape, chain or rope is used to transmit the position of the vehicle to the machine room, breakage of or slack in such a connecting device shall cause the machine to stop through the action of an electric safety device in conformity with 5.11.1.2.

5.9.8.5 The control and functioning of these devices shall be so designed that together with the normal speed regulation system there results a slowdown control system complying with the requirements of 5.11.1.2.

5.9.8.6 For the lifts having a reduced guided over-travel (e.g. lifts with front-mounted doors), the slowdown monitoring shall start from a minimum distance from the landings such that if a serious mechanical failure occurs in this zone, the vehicle could be stopped by the gravity or by the safety gear under the conditions referred to in 5.9.8.2.

5.9.9 Positive drive lifts – Monitoring of the tension of the ropes/chains

Positive drive lifts shall have the following:

a) a slack rope/chain device actuating an electric safety device. This device may be the same as required in 5.6.5.5;

b) an overload device actuating a sensor of the high tension in the driven ropes or an overload sensor of the machine.

These devices shall cause the vehicle to stop in accordance with 5.11.1.2.

5.9.10 Motor run time limiter

5.9.10.1 Traction drive lifts shall have a motor run time limiter causing the de-energizing of the machine, and keep it de-energized, if:

a) the machine does not rotate when a start is initiated;

b) the vehicle /counterweight is stopped in downwards movement by an obstacle which causes the ropes to slip on the traction sheave.

5.9.10.2 The motor run time limiter shall function in a time which does not exceed the smaller of the following two values:

a) 45 s;

b) time for travelling the full travel, plus 10 s, with a minimum of 20 s if the full travel time is less than 10 s;

The motor run time limiter can be reinitialized by the travel of the vehicle passed predetermined points.

5.9.10.3 The return to normal operation shall only be possible by manual resetting. On restoration of the power after a supply disconnection, maintaining the machine in the stopped position is not necessary.

5.9.10.4 The motor run time limiter shall not affect the movement of the vehicle under either the inspection operation or the emergency electrical operation.

5.9.11 Protection of machinery

Effective protection shall be provided for accessible rotating parts, which may be dangerous, in particular:

a) keys and screws in the shafts;

b) tapes, chains, belts;

c) gears, sprockets;

d) projecting motor shafts;

e) fly-ball type overspeed governors.

Exception is made for traction sheaves with protections according to 5.6.7, hand winding wheels, brake drums and any similar smooth, round parts. Such parts shall be painted yellow, at least in part.

5.9.12 Normal stopping of the car at landings and levelling accuracy

The stopping accuracy of the car measured vertically shall be ± 10 mm;

A levelling accuracy of ± 20 mm measured vertically shall be maintained. If, during e.g. loading and unloading phases, the value of 20 mm is exceeded, the stopping position shall be corrected.

5.9.13 Starting/slowdown of the vehicle

In normal operation (including in the case when the buffers are subjected to stress at the end of their stroke) and in all cases of loading the horizontal component of the acceleration endured by the passengers during starting or of the retardation during slowdown shall be less than 0,1 g.

5.10 Electric installations and appliances

5.10.1 General provisions

5.10.1.1 Limits of application

5.10.1.1.1 The requirements of this standard relating to the installation and to the constituent components of the electrical equipment apply:

a) to the main switch of the power circuit and dependent circuits;

b) to the switch for the car lighting circuit and dependent circuits.

The lift shall be considered as a whole, in the same way as a machine with its built in electrical equipment.

NOTE The national requirements relating to electricity supply circuits apply as far as the input terminals of the switches. They apply to the whole lighting and socket outlet circuits of the machine room, the pulley room and the lift well and pit.

5.10.1.1.2 The requirements of this standard for circuits dependent on the switches referred to in 5.10.1.1.1 are based, as far as possible, taking into account the specific needs of lifts, on existing standards:

a) on the international level: IEC;

b) on the European level: CENELEC.

Whenever one of these standards is used, its references are given, together with the limits within which it is used.

When no precise information is given, the electrical equipment used shall conform to the accepted Codes of Practice relating to safety.

5.10.1.1.3 The electromagnetic compatibility shall comply with the requirements of EN 12015:2014 and EN 12016:2013.

5.10.1.2 Protection against direct contact

In the machinery and pulley spaces protection of the electrical equipment against direct contact shall be provided by means of casings providing a degree of protection of at least IP2X.

5.10.1.3 Insulation resistance of the electrical installation (CENELEC HD 60364-6:2007)

The insulation resistance shall be measured between all live conductor and earth for all circuits:

a) which are not PELV;

b) exceeding 100 VA.

Minimum values of insulation resistance shall be taken from Table 7.

Table 7 — Insulation resistance

Nominal circuit voltage V	Test voltage (d.c.) V	Insulation resistance MΩ
SELV[a] and PELV[b]	250	≥ 0,5
≤ 500 including FELV[c]	500	≥ 1,0
> 500	1000	≥ 1,0

[a] SELV: Safety Extra Low Voltage
[b] PELV: Protective Extra Low Voltage
[c] FELV: Failure Extra Low Voltage

When the circuit includes electronic devices, phase and neutral conductors shall be connected together during measurement.

5.10.1.4 Voltage limit for control and safety circuits

For control and safety circuits, the value in direct current or the r.m.s. value in alternating current between conductors or between conductors and earth shall not exceed 250 V.

5.10.1.5 Conductor for neutral and earth-continuity

The earth-continuity conductor shall be in accordance with EN 60204-1:2006, Clause 8.

5.10.2 Contactors, relay-contactors, components of safety circuits

5.10.2.1 Contactors and relay-contactors

5.10.2.1.1 The main contactors, i.e. those necessary to stop the machine as per 5.9.7, shall belong to the following categories as defined in EN 60947-4-1:2010:

a) AC-3 for contactors of AC motors;

b) DC-3 for contactors of DC motors.

These contactors shall, in addition allow 10 % of starting operations to be made as inching.

5.10.2.1.2 If, because of the power they carry, relay-contactors are used to operate the main contactors; those relay-contactors shall belong to the following categories as defined in EN 60947-5-1:2004:

a) AC-15 for contactors in alternating current control circuits;

b) DC-13 for contactors in direct current control circuits.

5.10.2.1.3 Both for the main contactors referred to in 5.10.2.1.1 and for the relay-contactors referred to in 5.10.2.1.2, it may be assumed in the measures taken to comply with 5.11.1.1.1 that:

a) if one of the break contacts (normally closed) is closed, all the make contacts are open;

b) if one of the make contacts (normally open) is closed, all the break contacts are open.

5.10.2.2 Components of safety circuits

5.10.2.2.1 When relay-contactors as per 5.10.2.1.2 are used, as relays in a safety circuit, the assumptions of 5.10.2.1.3 shall also apply.

5.10.2.2.2 If relays are used which are such that the break and make contacts are never closed simultaneously for any position of the armature, the possibility of partial attraction of the armature (5.11.1.1.1 f)) can be disregarded.

5.10.2.2.3 Devices (if any) connected after electrical safety devices shall meet the requirements of 5.11.1.2.2.4 as regards the creep distances and the air gaps (not the separation distances).

This requirement does not apply to the devices mentioned in 5.10.2.1.1, 5.10.2.1.2 and 5.10.2.2.1 and which themselves fulfil the requirements of EN 60947-4-1:2010 and EN 60947-5-1:2004.

For printed circuit boards requirements as mentioned in Table H.1 (3.6) are applicable.

5.10.3 Protection of motors and other electrical equipment

5.10.3.1 Motors directly connected to the mains shall be protected against short-circuiting.

5.10.3.2 Motors directly connected to the mains shall be protected against overload by means of automatic circuit breakers with manual reset (except as provided for in 5.10.3.3) which shall cut off the supply to the motor in all live conductors (see EN 60947-4-1:2010).

5.10.3.3 When the detection of overloads of the lift motor operates on the basis of temperature increase of the motor windings the interruption of the motor supply shall only occur in accordance with 5.10.3.6.

5.10.3.4 The provisions of 5.10.3.2 and 5.10.3.3 apply to each winding if the motor has windings supplied by different circuits.

5.10.3.5 When the lift motors are supplied from DC generators driven by motors, the lift motors shall also be protected against overloads.

5.10.3.6 If the design temperature of an electrical equipment provided with a temperature monitoring device is exceeded and the lift should not continue in operation, then the car shall stop at a landing such as the passengers can leave the car. An automatic return to normal operation of the lift shall only occur after sufficient cooling down.

5.10.4 Main switches

5.10.4.1 For each lift, a main switch capable of breaking the supply to the lift on all the live conductors shall be provided. This switch shall be capable of interrupting the highest current involved in normal conditions of use of the lift.

5.10.4.2 The main switch shall not cut the circuits feeding:

a) car lighting or ventilation, if any;

b) socket outlet on the car roof;

c) lighting of machinery and pulley spaces;

d) socket outlet in the machinery and pulley spaces and in the pit;

e) lighting of the lift well;

f) alarm device.

5.10.4.3 The main switch shall be located:

a) in the machine room where it exists;

b) where no machine room exists, in the control cabinet, except if this cabinet is mounted in the well, or

c) at the emergency and tests panel(s) (5.3.6) when the control cabinet is mounted in the well. If the emergency panel is separate from the test panel, the switch shall be at the emergency panel.

If the main switch is not easily accessible from the control cabinet, then the cabinet shall be provided with an isolating switch as required in 5.10.4.4.

5.10.4.4 The main switches as defined in 5.10.4.3 shall have stable open and closed positions, and shall be capable of being locked-off in the open position, with the use of a padlock or equivalent, to ensure no inadvertent operation.

The control mechanism for the main switch shall be easily and rapidly accessible from the entrance(s) to the machine room. If the machine room is common to several lifts, the control mechanism of the main switches shall allow the lift concerned to be identified easily.

If the machine room has several points of access, or if the same lift has several machine rooms each with its own point(s) of access, a circuit breaker contactor may be used, release of which shall be controlled by an electric safety device, in conformity with 5.11.1.2, inserted in the supply circuit to the coil of the circuit breaker contactor.

The re-engagement of the circuit breaker contactor shall not be carried out or made possible except by means of the device, which caused its release. The circuit-breaker contactor shall be used in conjunction with a manually controlled isolating switch.

5.10.4.5 In the case of a group of lifts, if, after the opening of the main switch for one lift, parts of the operating circuits remain live, these circuits shall be capable of being separately isolated in the machine room, if necessary by breaking the supply to all the lifts in the group.

5.10.4.6 Any capacitors to correct the power factor shall be connected before the main switch of the power circuit.

If there is a risk of over-voltage, when for example the motors are connected by very long cables, the switch of the power circuit shall also interrupt the connection to the capacitors.

5.10.5 Electric wiring

5.10.5.1 Types of cable

5.10.5.1.1 In the machine and pulley rooms and lift wells, the conductors and cables (with the exception of travelling cables) shall be selected from those standardized by CENELEC and of a quality at least equivalent to that defined by the below mentioned standards of the CENELEC HD 21 and HD 22 series taking into account the information given in 5.10.1.1.2.

5.10.5.1.2 Conductors such as those in conformity with CENELEC HD 21.3 S3, parts 2 (H07V-U and H07V-R), part 3 (H07V-K), part 4 (H05V-U) and part 5 (H05V-K) are permitted only in conduits, ducting, or similar fittings ensuring equivalent protection. When deviating from HD 21.3 S3, the nominal cross-sectional area of the conductors shall be not less than 0,75 mm^2.

5.10.5.1.3 Rigid cables such as those in conformity with part 4 of HD 21.4 S2 are permitted only in visible mountings fixed to the walls of the well (or of the machine room) or in conduits, ducting, or similar fittings.

5.10.5.1.4 Ordinary flexible cables such as those in conformity with part 4 (H05RR-F) of HD 22.4 S4 and part 5 (H05VV-F) of HD 21.5 S3, are permitted only in conduits, ducting, similar fittings ensuring equivalent protection or in a position within the well where it is not vulnerable to accidentally damage.

Flexible cables with a thick sheath such as those in conformity with part 4 of HD 22.4 S4 may be used like rigid cables in the conditions defined in 5.10.5.1.3, and for connection to a movable appliance (except as travelling cables for connection to the vehicle) or if they are subject to vibrations.

Travelling cables in conformity with EN 50214:2006 shall be accepted as cables for connection to the vehicle, within the limits laid down by these documents. In all cases, the travelling cables selected shall be of at least equivalent quality.

5.10.5.1.5 The requirements of 5.10.5.1.2, 5.10.5.1.3 and 5.10.5.1.4 need not apply:

a) to conductors or cables not connected to electric safety devices on landing doors, provided that:

   1) they are not subject to a rated output of more than 100 VA;

   2) the voltage, between poles (or phases) or between a pole (or one of the phases) and earth, to which they are normally subject does not exceed 50 V;

b) to the wiring of operating or distribution devices in cabinets or on panels:

   1) either between different pieces of electric equipment, or

   2) between these pieces of equipment and the connection terminals.

In these instances the requirements of EN 61439-1:2011, 8.6.3, apply.

NOTE The requirements of 5.10.5.1.2 and 5.10.5.1.4 replace those in the guide to use appearing in HD 516 S2 [4].

5.10.5.2 Cross-sectional area of conductors

In order to provide mechanical strength the cross-sectional area of conductors to electric safety devices of doors shall not be less than 0,75 mm^2.

5.10.5.3 Method of installation

5.10.5.3.1 The electric installation shall be provided with the indications necessary to make it easy to understand.

5.10.5.3.2 Connections, connection terminals and connectors, except those defined in 5.10.1.2, shall be located in cabinets, boxes or on panels provided for this purpose.

5.10.5.3.3 If, after the opening of the main switch or switches of a lift, some connection terminals remain live, they shall be clearly separated from terminals, which are not live, and if the voltage exceeds 50 V, they shall be suitably marked.

In these instances the requirements of EN 60204-1:2006, 5.3.5 and 16.2, apply.

5.10.5.3.4 Connection terminals whose accidental interconnection could lead to a dangerous malfunction of the lift shall be clearly separated unless their method of construction obviates this risk.

5.10.5.3.5 In order to ensure continuity of mechanical protection, the protective enclosures of cables shall enter the casings of switches and appliances, or shall have proper glands at their ends.

NOTE Enclosed frames of landing and car doors are regarded as appliance casings.

However, if there is a risk of mechanical damage due to movement of parts or sharp edges of the frame itself, the conductors connected to the electric safety device shall be protected mechanically.

5.10.5.3.6 If the same ducting or cable contains conductors whose circuits have different voltages, all the conductors or cables shall have the insulation specified for the highest voltage.

5.10.5.3.7 If linked cables to the vehicle or to the counterweight are used, devices shall prevent these cables from rubbing against all parts fixed or movable.

5.10.5.4 Connectors

Connectors and devices of the plug-in type which are safety related and which can be extracted without the use of a tool shall be designed in such a way that it is impossible to re-insert them incorrectly.

5.10.5.5 Lighting and socket outlets

5.10.5.5.1 The electric lighting supplies to the vehicle, the well and the machinery and pulley spaces, and emergency and test panel(s) (5.3.6), shall be independent of the supply to the machine, either through another circuit or through connection to the machine supply circuit on the supply side of the main switch or the main switches laid down in 5.10.4.

5.10.5.5.2 The supply to socket outlets required on the vehicle, in the machinery and pulley spaces and in the pit, shall be taken from the circuits referred to in 5.10.5.5.1.

These socket outlets shall be:

a) either of type 2 P + PE, 250 V, supplied directly, or

b) supplied at a safety extra-low voltage (SELV) in accordance with HD 60364-4-41:2007, Clause 411.

The use of the above socket outlets does not imply that the supply cable has a cross-sectional area corresponding to the rated current of the socket outlet. The cross-sectional area of the conductors may be smaller, provided that the conductors are correctly protected against excess currents.

5.10.5.6 Control of the supply for lighting and socket outlets

5.10.5.6.1 A switch shall control the supply to the circuit for lighting and socket outlets of the lift car. If the machine room contains several lift machines it is necessary to have one switch per car. This switch shall be located close to the corresponding main power switch.

5.10.5.6.2 In the machinery spaces a switch or a similar device shall be located near to its access(es) controlling the supply for lighting. See also 5.3.3.7, 5.3.4.8 and 5.3.5.5.

Well lighting switches (or equivalent) shall be located both in the pit and close to the main switch so that the well light can be operated from either location.

5.10.5.6.3 Each circuit controlled by the switches laid down in 5.10.5.6.1 and 5.10.5.6.2 shall have its own short circuit protection.

5.11 Protection against electric faults; controls; priorities

5.11.1 Failure analysis and electric safety devices

5.11.1.1 Failure analysis

Any single fault listed in 5.11.1.1.1 in the electric equipment of a lift, if it cannot be excluded under conditions described in 5.11.1.1.2 and/or Annex H shall not, on its own, be the cause of a dangerous malfunction of the lift.

For safety circuits, see 5.11.1.2.3.

5.11.1.1.1 The following faults shall be envisaged:

a) absence of voltage;

b) voltage drop;

c) loss of continuity of a conductor;

d) insulation fault in relation to the metalwork or the earth;

e) short circuit or open circuit, change of value or function in an electrical component such as for instance resistor, capacitor, transistor, lamp, etc.;

f) non-attraction or incomplete attraction of the moving armature of a contactor or relay;

g) non-separation of the moving armature of a contactor or relay;

h) non-opening of a contact;

i) non-closing of a contact

j) phase reversal.

5.11.1.1.2 The non-opening of a contact need not be considered in the case of safety switches conforming to the requirements of 5.11.1.2.2.

5.11.1.1.3 The fault to earth of a circuit in which there is an electric safety device shall:

a) either cause the immediate stopping of the machine, or

b) prevent restarting of the machine after the first normal stop.

Return to service shall only be possible by manual resetting.

5.11.1.2 Electric safety devices

5.11.1.2.1 General requirements

5.11.1.2.1.1 During operation of one of the electric safety devices required in several clauses, movement of the machine shall be prevented or it shall be caused to stop immediately as indicated in 5.11.1.3.1. A list of such devices is given in Annex A.

The electric safety devices shall consist of:

a) either one or more safety switches satisfying 5.11.1.2.2 directly disconnecting the supply to the contactors referred to in 5.9.7 or their relay-contactors;

b) or safety circuits satisfying 5.11.1.2.3, consisting of one or a combination of the following:

   1) either one or more safety contacts satisfying 5.11.1.2.2 not directly disconnecting the supply to the contactors referred to in 5.9.7 or their relay-contactors;

   2) contacts not satisfying the requirements of 5.11.1.2.2;

   3) components in accordance with Annex H;

   4) programmable electronic systems in safety related applications in accordance with 5.11.1.3.3.

5.11.1.2.1.2 Apart from exceptions permitted in this standard (see 5.11.2.1.3 and 5.11.2.1.5), no electric equipment shall be connected in parallel with an electric safety device.

Connections to different points of the electric safety chain are only permitted for gathering information. The devices used for that purpose shall fulfil the requirements for safety circuits according to 5.11.1.2.3.

5.11.1.2.1.3 The effects of internal or external induction or capacity shall not cause failure of safety circuit.

5.11.1.2.1.4 An output signal emanating from a safety circuit shall not be altered by an extraneous signal emanating from another electric device placed further down the same circuit, which would cause a dangerous condition to result.

5.11.1.2.1.5 The construction and arrangement of the internal power supply units shall be such as to prevent the appearance of false signals at the outputs of electric safety devices due to the effects of switching. In particular, voltage peaks arising from the operation of the inclined lift or other equipment on the network shall not create inadmissible disturbances in electronic components (noise immunity) in compliance with EN 12015:2014 and EN 12016:2013.

5.11.1.2.1.6 In safety circuits comprising two or more parallel channels, all information other than that required for parity checks shall be taken from one channel only.

5.11.1.2.1.7 Circuits which record or delay signals shall not, even in event of fault, prevent or appreciably delay the stopping of the machine through the functioning of an electric safety device, i.e. the stopping shall occur in the shortest time compatible with the system.

5.11.1.2.2 Safety contacts

5.11.1.2.2.1 Safety contacts shall comply with the requirements of EN 60947-5-1:2004, Annex K, with a minimum protection degree of IP4X and a mechanical durability suitable for its purpose (at least 10^6 operating cycles) or shall fulfil the following requirements.

5.11.1.2.2.2 The operation of a safety contact shall be by positive separation of the contacts. This separation shall occur even if the contacts have welded together.

The design shall be such as to minimize the risk of a short-circuit resulting from a faulty component.

NOTE Positive opening is achieved when all the contact-breaking elements are brought to their open position and when for a significant part of the travel there are no resilient elements (e.g. springs) between the moving contacts and the part of the actuator to which the actuating force is applied.

5.11.1.2.2.3 The safety contacts shall be provided for a rated insulation voltage of 250 V if the enclosure provides a degree of protection of at least IP4X (in accordance with EN 60529:1991), or 500 V if the degree of protection of the enclosure is less than IP4X.

Safety switches shall belong to the following categories as defined in EN 60947-5-1:2004:

a) AC-15 for safety switches in AC circuits;

b) DC-13 for safety switches in DC circuits.

5.11.1.2.2.4 If the protective enclosure is not at least of type IP4X the air gaps shall be at least 3 mm and creep distances at least 4 mm.

After separation the distance for contacts shall be at least 4 mm.

If the protection is better than IP4X the creepage distance can be reduced to 3 mm.

5.11.1.2.2.5 In the case of multiple breaks, the individual distances for breaking contacts shall be at least 2 mm after separation.

5.11.1.2.2.6 Debris from the conductive material shall not lead to short-circuiting of contacts.

5.11.1.2.3 Safety circuits

5.11.1.2.3.1 General provisions

Anyone of the faults envisaged in 5.11.1.1.1 shall not be on its own the cause of a dangerous situation.

Safety circuits containing electronic components are regarded as safety components and shall be verified according to the requirements in F.5.

5.11.1.2.3.2 Drafting and assessing of safety circuits

Drafting and assessing safety circuits shall be as shown in Figure 7.

Furthermore, the following requirements shall apply:

a) If one fault combined with a second fault can lead to a dangerous situation, the lift shall be stopped at the latest at the next operating sequence in which the first faulty element should participate.

   All further operation of the lift shall be impossible as long as this fault persists.

The possibility of the second fault leading to a dangerous situation before the lift has been stopped by the sequence mentioned above, is not considered.

b) If two faults which by themselves do not lead to a dangerous situation, when combined with a third fault can lead to a dangerous situation, the lift shall be stopped at the latest at the next operating sequence in which one of the faulty elements should participate.

The possibility of the third fault leading to a dangerous situation before the lift has been stopped by the sequence mentioned above, is not considered.

c) If a combination of more than three faults is possible, then the safety circuit shall be designed with multiple channels and a monitoring circuit checking the equal status of the channels.

If a different status is detected the lift shall be stopped.

In case of two channels the function of the monitoring circuit shall be checked prior to a re-start of the lift at the latest, and in case of failure, re-starting shall not be possible.

d) On restoration of the power supply after it has been disconnected, maintenance of the lift in the stopped position is not necessary, provided that during the next sequence stopping is reimposed in the cases covered by 5.11.1.2.3.2 a) to c).

e) In redundancy-type circuits measures shall be taken to limit as far as possible the risk of defects occurring simultaneously in more than one circuit arising from a single cause.

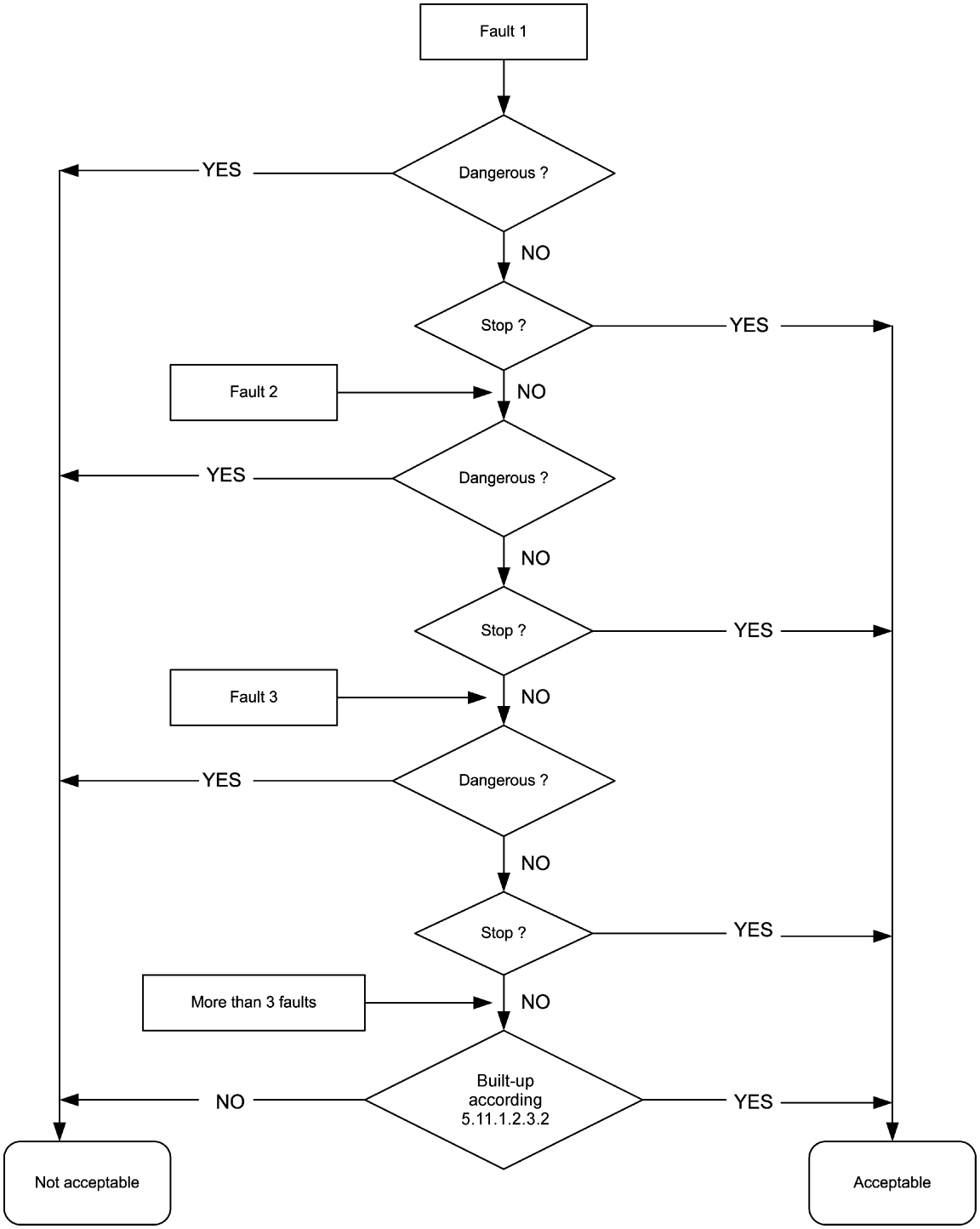

Figure 7 — Drafting and assessing of safety circuits

5.11.1.3 Operation of electric safety devices

5.11.1.3.1 General

When operated, an electric safety device shall prevent the setting in motion of the machine or immediately initiate its stopping. The electric supply to the brake shall likewise be broken.

The electric safety devices shall act directly on the equipment controlling the supply to the machine in accordance with the requirements of 5.9.7.

If, because of the power to be transmitted, relay contactors are used to control the machine, these shall be considered as equipment directly controlling the supply to the machine for starting and stopping.

5.11.1.3.2 Actuation of electric safety devices

The components actuating the electric safety devices shall be selected and assembled so that they are able to function properly under the mechanical stresses resulting from continuous normal operation.

If the devices for actuating electric safety devices are through the nature of their installation accessible to persons, they shall be so built that these electric safety devices cannot be rendered inoperative by simple means.

NOTE A magnet or a bridge piece is not considered a simple means.

In the case of redundancy-type safety circuits, it shall be ensured by mechanical or geometric arrangements of the transmitter elements that a mechanical fault shall not cause loss of redundancy.

For transmitter elements of safety circuits, the requirements of F.5.4.2 apply.

5.11.1.3.3 Programmable electronic systems in safety related applications (PESSRAL)

5.11.1.3.3.1 General

Risk analysis, terminology and technical solutions have been considered taking into account the methods of the EN 61508 series. This led to a necessary classification of safety functions applied to PESSRAL.

5.11.1.3.3.2 Design requirements

a) Tables A.1 and A.2 in Annex A give the safety integrity level for each electric safety device.

b) Programmable electronic systems designed in accordance with 5.11.1.3.3 cover the requirements of 5.11.1.2.3.2.

   The minimum requirements of the safety functions common to all SILs are listed in Tables 8, 9 and 10. In addition specific measures required for SILs 1, 2 and 3 are listed respectively in Tables 11, 12 and 13.

   NOTE The EN 61508–7:2010 clauses listed in Tables 8 to 13 refer to the relevant requirements in EN 61508–2:2010 and EN 61508–3:2010.

c) To avoid unsafe modification, measures to prevent unauthorized access to the program code and safety related data of PESSRAL shall be provided, e.g. using EPROM, access code, etc.

d) If a PESSRAL and a non-safety related system share the same hardware, the requirements for PESSRAL shall be met.

e) If a PESSRAL and a non-safety related system share the same PCB, the requirements of 5.10.2.2.3 shall apply for the separation of the two systems.

Table 8 — Common measures to avoid and detect failures - Hardware design

No	Object	Measure	EN 61508–7:2010 **reference**
1	**Processing unit**	Use of watch dog.	A.9
2	**Component selection**	Use of components only within their specifications.	
3	**I/O units and interfaces incl. communication links**	Defined safe state in the event of power failure or reset.	
4	**Power supply**	Defined safe shut-off state in case of over-voltage or under-voltage.	A.8.2
5	**Variable memory ranges**	Use of only solid state memories.	
6	**Variable memory ranges**	Read/write test of variable data memory during boot procedure.	
7	**Variable memory ranges**	Remote access only to informative data (e.g. statistics).	
8	**Invariant memory ranges**	No possibility to change the program code, either automatically by the system or remote intervention.	
9	**Invariant memory ranges**	Test of program code memory and fixed data memory during boot procedure with a method at least equivalent to sum check.	A.4.2

Table 9 — Common measures to avoid and detect failures - Software design

No	Object	Measure	EN 61508–7:2010 **reference**
1	**Structure**	Program structure (i.e. modularity, data handling, interface definition) according to the state of the art (see EN 61508–3:2010).	B.3.4/C.2.1 C.2.9/C.2.7
2	**Boot procedure**	During boot procedures a safe state of the lift shall be maintained.	
3	**Interrupts**	Limited use of interrupts: use of nested interrupts only if all possible sequences of interrupts are predictable.	C.2.6.5
4	**Interrupts**	No triggering of watchdog by interrupt procedure except in combination with other program sequence conditions.	A.9.4
5	**Power down**	No power down procedures, such as saving of data, for safety related functions.	
6	**Memory management**	Stack manager in the hardware and/or software with appropriate reaction procedure.	C.2.6.4/ C.5.4
7	**Program**	Iteration loops shorter than system reaction time, e.g. by limiting number of loops or checking execution time.	
8	**Program**	Array pointer offset checks, if not included in the used programming language.	C.2.6.6
9	**Program**	Defined handling of exceptions (e.g. divisions by zero, overflow, variable range checking etc.) which forces the system into a defined safe state.	
10	**Program**	No recursive programming, except in well-tried standard libraries, in approved operating systems, or in high-level language compilers. For these exceptions separate stacks for separate tasks shall be provided and controlled by a memory management unit.	C.2.6.7
11	**Program**	Documentation of programming library interfaces and operating systems at least as complete as the user program itself.	
12	**Program**	Plausibility checks on data relevant to safety functions, e.g. input patterns, input ranges, internal data.	C.2.5/C.3.1
13	**Program**	If any operational mode can be invoked for testing or validation purposes normal operation of the lift shall not be possible until this mode has been terminated.	EN 61508–1:2010, 7.7.2.1
14	**Communication system (external and internal)**	Reach a safe state with due consideration to the system reaction time in a bus communication system with safety functions in case of loss of communication or a fault in a bus participant.	A.7/A.9
15	**Bus system**	No reconfiguration of the CPU-bus system, except during the boot procedure. NOTE: Periodical refresh of the CPU-bus system is not considered as being reconfiguration.	C.3.10
16	**I/O handling**	No reconfiguration of I/O lines, except during the boot procedures. NOTE: Periodical refresh of the I/O configuration registers is not considered as being reconfiguration.	C.3.10

Table 10 — Common measures for the design and implementation process

No	Measure	EN 61508–7:2010 **reference**
1	Assessment of the functional, environmental and interface aspects of the application.	A.14/B.1
2	Requirement specification including the safety requirements.	B.2.1
3	Reviews of all specifications.	B.2.6
4	Design documentation as required in F.5.1 and in addition: - function description including system architecture and hardware/software interaction; - software documentation including function and program flow description.	C.5.9
5	Design review reports.	B.3.7/B.3.8, C.5.16
6	Check of reliability using a method such as failure mode and effect analysis (FMEA).	B.6.6
7	Manufacturer's test specification, manufacturer's test reports and field test reports.	B.6.1
8	Instruction documents including limits for intended use.	B.4.1
9	Repeat and update of above mentioned measures if the product is modified.	C.5.23
10	Implementation of version control of hardware and software and its compatibility.	C.5.24

Table 11 — Specific measures according to SIL 1

Components and functions	**Requirements**	**Measures**	**see No. in Annex I**	EN 61508–7:2010 **reference**
Structure	The structure shall be such that any single random failure is detected and the system shall go into a safe state.	One channel structure with self-test, or	M 1.1	A.3.1
		two channels or more with comparison.	M 1.3	A.2.5
Processing units	Failures in processing units, which can lead to incorrect results, shall be detected. If such a failure can lead to a dangerous situation the system shall go into a safe state.	Failure correcting hardware, or	M 2.1	A.3.4
		self-test by software, or	M 2.2	A.3.1
		comparator for two-channel structure, or	M 2.4	A.1.3
		reciprocal comparison by software for 2-channel structure.	M 2.5	A.3.5

Components and functions	Requirements	Measures	see No. in Annex I	EN 61508–7:2010 reference
Invariant memory ranges	Incorrect information modification, i.e. all odd bit or 2-bit failures and some 3-bit and multi-bit failures shall be detected at the latest before the next travel of the lift.	The following measures refer only to a one-channel structure: One-bit redundancy (parity bit), or block safety with one-word redundancy.	 M 3.5 M 3.1	 A.5.5 A.4.3
Variable memory ranges	Global failures during addressing, writing, storing and reading as well as all odd bit and 2-bit failures and some 3-bit failures and multi-bit failures shall be detected at the latest before the next travel of the lift.	The following measures refer only to a one-channel structure: Word-saving with multi-bit redundancy, or check via test pattern against static or dynamic faults.	 M 3.2 M 4.1	 A.5.6 A.5.2
I/O units and interfaces incl. communication links	Static failures and cross talk on I/O lines as well as random and systematic failures in the data flow, shall be detected at the latest before the next travel of the lift.	Code safety, or test pattern.	M 5.4 M 5.5	A.6.2 A.6.1
Clock	Failures in clock generation for processing units like frequency modification or break down shall be detected at the latest before the next travel of the lift.	Watchdog with separate time base, or reciprocal monitoring.	M 6.1 M 6.2	A.9.4
Program sequence	Wrong program sequence and inappropriate execution time of the safety related functions shall be detected at the latest before the next travel of the lift.	Combination of timing and logical monitoring of program sequence.	M 7.1	A.9.4
As a consequence of the detection of a failure, a safe state of the lift shall be maintained.				

Table 12 — Specific measures according to SIL 2

Components and functions	Requirements	Measures	see No. in Annex I	EN 61508–7:2010 reference
Structure	The structure shall be such that any single random failure is detected with due consideration to the system reaction time and that the system goes into a safe state.	One channel with self-test and monitoring, or	M 1.2	A.3.3
		two channels or more with comparison.	M 1.3	A.2.5
Processing units	Failures in processing units, which can lead to incorrect results, shall be detected with due consideration to the system reaction time. If such a failure can lead to a dangerous situation the system shall go into a safe state.	Failure correcting hardware, and	M 2.1	A.3.4
		software self-test supported by hardware for one-channel structure, or	M 2.3	A.3.3
		comparator for 2-channel structure, or	M 2.4	A.1.3
		reciprocal comparison by software for 2-channel structure.	M 2.5	A.3.5
Invariant memory ranges	Incorrect information modification, i.e. all odd bit or 2-bit failures and some 3-bit and multi-bit failures shall be detected with due consideration to the system reaction time.	The following measures refer only to a one-channel structure:		
		Block safety with one-word redundancy, or	M 3.1	A.4.3
		word saving with multi-bit redundancy.	M 3.2	A.5.6
Variable memory ranges	Global failures during addressing, writing, storing and reading as well as all odd bit and 2-bit failures and some 3-bit failures and multi-bit failures shall be detected with due consideration to the system reaction time.	The following measures refer only to a one-channel structure:		
		Word-saving with multi-bit redundancy, or	M 3.2	A.5.6
		check via test pattern against static or dynamic faults.	M 4.1	A.5.2
I/O units and interfaces incl. communication links	Static failures and cross talk on I/O lines as well as random and systematic failures in the data flow, shall be detected with due consideration to the system reaction time.	Code safety, or	M 5.4	A.6.2
		test pattern.	M 5.5	A.6.1

Components and functions	Requirements	Measures	see No. in Annex I	EN 61508–7:2010 reference
Clock	Failures in clock generation for processing units like frequency modification or break down shall be detected with due consideration to the system reaction time.	Watchdog with separate time base, or reciprocal monitoring.	M 6.1 M 6.2	A.9.4
Program sequence	Wrong program sequence and inappropriate execution time of the safety function shall be detected with due consideration to the system reaction time.	Combination of timing and logical monitoring of program sequence.	M 7.1	A.9.4
As a consequence of the detection of a failure, a safe state of the lift shall be maintained.				

Table 13 — Specific measures according to SIL 3

Components and functions	Requirements	Measures	see No. in Annex I	EN 61508–7:2010 reference
Structure	The structure shall be such that any single random failure is detected with due consideration to the system reaction time and that the system goes into a safe state.	2 channels or more with comparison.	M 1.3	A.2.5
Processing units	Failures in processing units, which can lead to incorrect results, shall be detected with due consideration to the system reaction time. If such a failure can lead to a dangerous situation the system shall go into a safe state.	Comparator for two channels structure, or reciprocal comparison by software for 2-channel structure.	M 2.4 M 2.5	A.1.3 A.3.5
Invariant memory ranges	Incorrect information modification, i.e. all 1-bit or multi-bit failures, shall be detected with due consideration to the system reaction time.	Block safety procedure with block replication, or block safety with multi-word redundancy.	M 3.3 M 3.4	A.4.5 A.4.4
Variable memory ranges	Global failures during addressing, writing, storing and reading as well as static bit failures and dynamic couplings shall be detected with due consideration to the system reaction time.	Block safety procedure with block replication, or inspection checks such as ”Galpat”.	M 4.2 M 4.3	A.5.7 A.5.3

Components and functions	Requirements	Measures	see No. in Annex I	EN 61508–7:2010 reference
I/O units and interfaces incl. communication links	Static failures and cross talk on I/O lines as well as random and systematic failures in the data flow, shall be detected with due consideration to the system reaction time.	Multi-channel parallel input and	M 5.1	A.6.5
		multi-channel parallel output, or	M 5.3	A.6.3
		output read back, or	M 5.2	A.6.4
		code safety, or	M 5.4	A.6.2
		test pattern.	M 5.5	A.6.1
Clock	Failures in clock generation for processing units like frequency modification or break down shall be detected with due consideration to the system reaction time.	Watchdog with separate time base, or	M 6.1	A.9.4
		reciprocal monitoring.	M 6.2	
Program sequence	Wrong program sequence and inappropriate execution time of the safety function shall be detected with due consideration to the system reaction time.	Combination of timing and logical monitoring of program sequence.	M 7.1	A.9.4
As a consequence of the detection of a failure, a safe state of the lift shall be maintained.				

5.11.2 Controls

5.11.2.1 Control of lift operations

5.11.2.1.1 General

Control shall be effected electrically.

5.11.2.1.2 Control of normal operation

This control shall be by the aid of buttons or similar devices, such as touch control, magnetic cards, etc. These shall be placed in boxes, such that no live parts are accessible to the user.

5.11.2.1.3 Control of re-levelling with doors open

In the specific case referred to in 5.4.7.2.2 movement of the vehicle with landing and car doors open is permitted for re-levelling under the following conditions.

a) If the movement is limited to the unlocking zone (5.4.7.1.1):

   1) All movement of the vehicle outside the unlocking zone shall be prevented by at least one switching device mounted in the bridge or shunt of the door and lock electric safety devices.

   2) This switching device shall be:

      i) either a safety contact in conformity with 5.11.1.2.2, or

ii) connected in such a way as to satisfy the requirements for safety circuits in 5.11.1.2.3.

3) If the operation of the switches is dependent upon a device which is indirectly mechanically linked to the vehicle, e.g. by rope, belt or chain, the breaking of or slack in the connecting link shall cause the machine to stop through the action of an electric safety device in conformity with 5.11.1.2.

4) During re-levelling operations, the means for making the electric safety devices of doors inoperative shall only function after the stopping signal for this landing has been given.

b) If the speed of re-levelling does not exceed 0,3 m/s:

It shall be checked

1) for machines whose maximum speed of rotation is determined by the fixed frequency of the supply, that the control circuit for the low speed movement only has been energized;

2) for machines supplied from static converters, that re-levelling speed does not exceed 0,3 m/s.

5.11.2.1.4 Control of inspection operation

5.11.2.1.4.1 To facilitate inspection and maintenance, a readily accessible control station shall be provided at a working station.

5.11.2.1.4.2 The inspection control station shall be brought into operation by a switch (inspection operation switch) which shall satisfy the requirements for electric safety devices (5.11.1.2).

This switch, which shall be bi-stable, shall be protected against involuntary operation.

The following conditions for functioning shall be satisfied simultaneously:

a) engagement of the inspection operation shall neutralize:

1) the normal operation controls, including the operation of any automatic power operated doors;

2) emergency electrical operation (5.11.2.1.5);

The return to normal service of the lift shall only be effected by another operation of the inspection switch.

If the switching devices used for this neutralization are not safety contacts integral with the inspection switch mechanism, precautions shall be taken to prevent all involuntary movement of the vehicle in the event of one of the faults listed in 5.11.1.1.1 appearing in the circuit;

b) the movement of the vehicle shall be dependent on a constant pressure on a push-button protected against accidental operation and with the direction of movement clearly indicated;

c) the control device shall also incorporate a stopping device in conformity with 5.11.2.2;

d) the vehicle speed shall not exceed 0,63 m/s;

e) the limits of normal vehicle travel shall not be overrun;

f) the operation of the lift shall remain dependent on the safety devices.

The control station may also incorporate special switches protected against accidental operation for controlling the mechanism of doors from the car roof.

5.11.2.1.4.3 An inspection control station may be placed either in the car in the case of 5.3.4.3.4, or in the pit/headroom in the case of 5.3.4.4.1 or on a platform in the well in the case 5.3.4.5.6. The inspection control station shall be inaccessible to the public.

More than two inspection control stations shall not be installed.

Where two inspection control stations are fitted, an interlock system shall ensure the following:

a) if one inspection control station is switched to "**INSPECTION**", the lift can be moved by pressing the push buttons on that inspection control station;

b) if more than one inspection control station is switched to "**INSPECTION**":

   1) it shall not be possible to move the vehicle from any of them, or

   2) it shall be possible to move the vehicle when push buttons on both inspection control stations are operated simultaneously (see Introduction - Principles).

5.11.2.1.5 Control of emergency electrical operation

If a means of emergency electrical operation is required in accordance with 5.9.5.3 an emergency electrical operation switch in conformity with 5.11.1.2 shall be installed. The machine shall be supplied from the normal mains supply or from the standby supply if there is one.

The following conditions shall be satisfied simultaneously:

a) operation of the emergency electrical operation switch shall permit, the control of vehicle movement by constant pressure on buttons protected against accidental operation. The direction of movement shall be clearly indicated;

b) after operation of the emergency electrical operation switch, all movement of the vehicle except that controlled by this switch shall be prevented.

   The effects of the emergency electrical operation shall be overridden by switching on the inspection operation;

c) the emergency electrical operation switch shall render inoperative by itself or through another electric switch in conformity with 5.11.1.2 the following electric devices:

   1) those mounted on the safety gear, according to 5.6.8.8;

   2) those of the overspeed governor, according to 5.6.9.8.1 and 5.6.9.8.2;

   3) those mounted on the ascending vehicle overspeed protection means, according to 5.6.10.6;

   4) those mounted on the buffers, according to 5.7.4.3.4;

   5) final limit switches, according to 5.7.5;

d) the emergency electrical operation switch and its push-buttons shall be so placed that the machine can be observed directly or by display devices (5.3.6.2 c));

e) the vehicle speed shall not exceed 0,63 m/s.

5.11.2.2 Stopping devices

5.11.2.2.1 A stopping device shall be provided for stopping, and maintaining the lift out of service, including the power operated doors:

a) in the pit (5.2.7.4.3 a));

b) in the pulley rooms (5.3.7.1.6)

c) on the car roof (if accessible for maintenance operation 5.5.15), in an easily accessible position and no more than 1,00 m from the entry point for inspection or maintenance personnel. This device may be the one located next to the inspection operation control if this is not placed more than 1,00 m from the access point);

d) at the inspection control device (5.11.2.1.4.2 c));

e) at the lift machine, unless there is a main switch or another stopping device nearby that is directly accessible within 1,00 m;

f) at the test panel(s) (5.3.6), unless there is a main switch or another stopping device nearby that is directly accessible within 1,00 m.

5.11.2.2.2 The stopping devices shall consist of electric safety devices in conformity with 5.11.1.2. They shall be bi-stable and such that a return to service cannot result from an involuntary action.

5.11.2.3 Emergency alarm device

5.11.2.3.1 In order to call for outside assistance, an emergency alarm device according to EN 81-28:2003 shall be installed

5.11.2.3.2 An intercom system, or similar device, powered by the emergency supply referred to in 5.5.17.4, shall be installed between inside the car and the place from which the emergency operation is carried out if the lift travel exceeds 30 m or if a direct acoustic communication between both locations is not possible.

5.11.2.4 Priorities and signals

5.11.2.4.1 For lifts with manual doors, a device shall prevent the vehicle leaving a landing for a period of at least 2 s after stopping.

5.11.2.4.2 A user entering the car shall have at least 2 s after the doors have closed, to actuate a control device before any external call buttons can become effective.

This requirement need not apply in the case of lifts operating on collective control.

5.11.2.4.3 In the case of collective control, an illuminated signal, which is clearly visible from the landing, shall indicate to the users waiting on this landing the direction of the next movement imposed on the vehicle.

For groups of lifts, position indicators on the landings are not recommended. However, it is recommended that the arrival of a car be preceded by an audible signal.

5.11.2.5 Load control

5.11.2.5.1 The lift shall be fitted with a device to prevent normal starting, including re-levelling, in the event of overload in the car.

5.11.2.5.2 The overload is considered to occur when the rated load is exceeded by 10 % with a minimum of 75 kg.

5.11.2.5.3 In the event of overload:

a) users shall be informed by an audible and/or a visible signal in the car;

b) automatic power operated doors shall be brought into the fully open position;

c) manually operated doors shall remain unlocked;

d) any preliminary operation in accordance with 5.4.7.2.1 and 5.4.7.3.2 shall be nullified.

6 Verification of the safety requirements and/or protective measures

6.1 Methods to be used

Table 14 indicates the methods by which the safety requirements and measures described in Clauses 5 and 7 shall be verified by the manufacturer for each new lift, together with a reference to the corresponding subclauses in this standard. Secondary sub-clauses, which are not listed in the table, are verified as part of the quoted sub-clause. All verification records shall be kept by the manufacturer.

Table 14 — Verification table — Methods to be used to verify conformity to the requirements

Subclause	Safety requirements	Test	Measurement	Calculation	Visual inspection
5.2.1	Lift well - General provisions				X
5.2.2.1	Well enclosure - General				X
5.2.2.2	Totally enclosed well				X
5.2.2.3	Partially enclosed well		X	X	
5.2.2.4	Inspection and emergency doors - Inspection traps		X	X	
5.2.2.5	Ventilation of the well			X	X
5.2.3.1	Walls, floor and ceilings of wells and end of walls - General			X	
5.2.3.2	Strength of the walls			X	X
5.2.3.3	Strength of the pit floor			X	
5.2.3.4	Strength of the ceiling			X	
5.2.3.5	Structures			X	
5.2.4	Construction of the walls of lift wells and landing doors facing a car entrance		X	X	X
5.2.5	Protection of any spaces located in the vehicle trajectory, the counterweight or the balancing weight at the lowest level			X	X
5.2.6	Protection in the well		X		X
5.2.7.2.1	Top clearances for traction drive lifts		X		X
5.2.7.2.2	Top clearances for positive drive lifts		X		X

Subclause	Safety requirements	Test	Measurement	Calculation	Visual inspection
5.2.7.4.1	Bottom of the pit				X
5.2.7.4.2	Access to the pit			X	X
5.2.7.4.3	Safety volumes and clearances in the pit		X		X
5.2.7.4.4	Devices in the pit	X			X
5.2.7.5	Lifts with front mounted doors	X		X	
5.2.8	Exclusive use of the lift well				X
5.2.9	Lighting of the well		X		
5.2.10	Emergency release	X			X
5.2.11	Access to the well through a landing door				X
5.2.12	Protection of the areas under the running track				X
5.3.1	Machine, working areas and pulley spaces - General provisions				X
5.3.2	Access		X		X
5.3.3.1	Machinery in machine room- General provisions				X
5.3.3.2	Mechanical strength, floor surface			X	
5.3.3.3	Dimensions		X		X
5.3.3.4	Doors and trap doors		X		X
5.3.3.5	Other openings		X		X
5.3.3.6	Ventilation				X
5.3.3.7	Lighting and socket outlets		X		X
5.3.3.8	Handling of equipment			X	X
5.3.4.1	Working areas and machinery inside the well - General provisions		X		X
5.3.4.2	Dimensions of working areas inside the well		X		X
5.3.4.3	Working stations in the car or on the car roof		X		X
5.3.4.4	Working areas in the pit and in the headroom of the well	X			X
5.3.4.5	Working areas on a platform in the well		X	X	X
5.3.4.6	Doors and traps		X		X
5.3.4.7	Ventilation				X
5.3.4.8	Lighting and socket outlets		X		X
5.3.4.9	Handling of equipment			X	X

Subclause	Safety requirements	Test	Measurement	Calculation	Visual inspection
5.3.5.1	Working areas and machinery outside of the well - General provisions			X	X
5.3.5.2	Machinery cabinet			X	X
5.3.5.3	Working area		X		X
5.3.5.4	Ventilation				X
5.3.5.5	Lighting and socket outlets		X		X
5.3.6	Devices for emergency and test operations	X	X		X
5.3.7.1.1	Pulley rooms - General				X
5.3.7.1.2	Mechanical strength, floor surface			X	
5.3.7.1.3	Dimensions		X		X
5.3.7.1.4	Doors and trap doors		X		X
5.3.7.1.5	Other openings		X		X
5.3.7.1.6	Stopping device			X	X
5.3.7.1.7	Temperature				X
5.3.7.1.8	Lighting and socket outlets		X		X
5.3.7.2	Pulleys in the well		X		X
5.4.1	Landing doors - General provisions				X
5.4.2.1	Strength of doors and their frames - General				X
5.4.2.2	Behaviour under fire conditions			X	
5.4.2.3	Mechanical strength			X	X
5.4.3	Height and width of entrances		X		
5.4.4.1	Door Sills			X	X
5.4.4.2	Door Guides			X	X
5.4.4.3	Suspension of vertically sliding doors			X	X
5.4.5.1	Protection in relation to door operation - General		X	X	X
5.4.5.2.1	Power operated doors - General	X		X	X
5.4.5.2.2	Horizontally sliding doors	X		X	X
5.4.5.2.3	Vertically sliding doors			X	X
5.4.5.2.4	Other types of doors				X
5.4.6.1	Local Lighting		X		
5.4.6.2	“Car Here” Indication		X	X	X
5.4.7.1	Locking and closed landing door check - Protection against the risk		X		

Subclause	Safety requirements	Test	Measurement	Calculation	Visual inspection
	of falling				
5.4.7.2	Locking and closed landing door check - Protection against shearing	X	X		
5.4.7.3.1	Locking and emergency unlocking – General provision				X
5.4.7.3.2	Locking		X	X	X
5.4.7.3.3	Emergency unlocking				X
5.4.7.4	Electrical device for proving the landing door closed				X
5.4.7.5	Common requirements for proving locked and closed condition				X
5.4.7.6	Sliding doors with multiple, mechanically linked panels				X
5.4.8	Closing of automatically operated doors	X			X
5.5.1	Height of car		X		
5.5.2	Available car area, rated load, number of passengers		X	X	
5.5.3.1	Walls, floor and roof of the car – Structural design	X	X	X	X
5.5.3.2	Maintaining of the passengers and of the goods				X
5.5.3.3	Protection against fire			X	X
5.5.3.4	Car floor and link with landing		X		X
5.5.4	Car apron		X		X
5.5.5	Car entrance				X
5.5.6.1	Car doors - General		X		X
5.5.6.2	Sills, guides, door suspension			X	X
5.5.6.3	Mechanical strength			X	X
5.5.7.2.1	Protection during operation of power operated doors -General		X		X
5.5.7.2.2	Horizontally sliding doors	X		X	X
5.5.7.2.3	Vertically sliding doors			X	X
5.5.8	Reversal of closing movement	X			X
5.5.9	Electrical device for proving the car doors closed				X
5.5.10	Sliding doors with multiple, mechanically linked panels				X
5.5.11	Opening the car door			X	X
5.5.12	Emergency trap doors and		X		X

Subclause	Safety requirements	Test	Measurement	Calculation	Visual inspection
	emergency doors				
5.5.13	Working station		X	X	X
5.5.14	Car header and car sides				X
5.5.15	Inspection equipment				X
5.5.16	Ventilation, heating, air-conditioning		X		X
5.5.17	Lighting		X		X
5.5.18	Counterweight and balancing weight				X
5.5.19	Running/sliding elements				X
5.5.20	Element for maintaining the vehicle inside the dynamic envelope			X	X
5.5.21	Clearance of obstacles				X
5.6.1	Types of suspension and pulling devices		X	X	X
5.6.2	Sheave, pulley, drum and rope diameter ratios, rope/chain terminations, safety coefficients		X	X	X
5.6.3	Rope traction	X		X	
5.6.4	Winding up of ropes for positive drive lifts			X	X
5.6.5	Distribution of load between the ropes or the chains	X			X
5.6.6	Compensation with ropes/loop ropes		X		X
5.6.7	Protection for traction sheaves, pulleys and sprockets				X
5.6.8.1	Safety gear - General provisions	X			X
5.6.8.2	Safety gear conditions of use				X
5.6.8.3	Methods of tripping	X			X
5.6.8.4	Retardation	X	X		
5.6.8.5	Release	X			X
5.6.8.6	Constructional conditions			X	X
5.6.8.7	Inclination of the car floor	X	X		
5.6.8.8	Electrical checking	X			
5.6.9.1	Operation of overspeed governor	X		X	X
5.6.9.2	Governor driven by rope	X		X	X
5.6.9.3	Governor not driven by rope	X		X	X
5.6.9.4	Programmable electronic overspeed governor	X	X		

Subclause	Safety requirements	Test	Measurement	Calculation	Visual inspection
5.6.9.5	Response time		X		
5.6.9.6	Accessibility				X
5.6.9.7	Possibility of tripping the overspeed governor; sealing	X			X
5.6.9.8	Electrical checking	X			
5.6.10	Ascending vehicle overspeed protection means	X		X	X
5.6.11	Protection against unintended vehicle movement	X	X		X
5.7.1.1	Mechanical strength of running tracks, guide rails, counter-guide rails and safety gear gripping element			X	X
5.7.1.2	Permissible stresses and deflections			X	
5.7.1.3	Fixing of the guide rails				X
5.7.2.1	Running tracks			X	X
5.7.2.2	Guide rails			X	X
5.7.2.3	Counter-guide rail			X	X
5.7.2.4	Safety gear gripping element				X
5.7.2.5	Multi-function element			X	
5.7.3	Vehicle and counterweight buffers		X	X	X
5.7.4	Stroke of vehicle and counterweight buffers	X	X	X	X
5.7.5.1	Final limit switches - General				X
5.7.5.2	Actuation of the final limit switches				X
5.7.5.3	Method of operation of final limit switches				X
5.8.1	Clearances between vehicle and wall facing the vehicle entrance, and between car, counterweight or balancing weight - General provision				X
5.8.2	Clearances between vehicle and wall facing the vehicle entrance		X		
5.8.3	Clearances between vehicle, counterweight or balancing weight		X		
5.9.1	Lift machine - General provision				X
5.9.2	Drive of the vehicle and the counterweight or balancing weight		X	X	
5.9.3	Use of overhung pulleys or sprockets				X

Subclause	Safety requirements	Test	Measurement	Calculation	Visual inspection
5.9.4	Braking system	X			X
5.9.5	Emergency operation			X	X
5.9.6	Speed	X			
5.9.7	Stopping the machine and checking its stopped condition	X			
5.9.8	Monitoring the slowdown of the machine	X			
5.9.9	Positive drive lifts – Monitoring of the tension of the ropes/chains	X			
5.9.10	Motor run time limiter	X	X		
5.9.11	Protection of machinery				X
5.9.12	Normal stopping of the car at landings and levelling accuracy	X	X		
5.9.13	Starting/slowdown of the vehicle			X	
5.10.1	Electric installations and appliances - General provisions			X	
5.10.2	Contactors, relay-contactors, components of safety circuits			X	
5.10.3	Protection of motors and other electrical equipment	X			X
5.10.4	Main switches				X
5.10.5	Electric wiring			X	X
5.11.1	Failure analysis and electric safety devices	X			
5.11.2.1	Control of lift operations			X	X
5.11.2.1.2	Control of normal operation				X
5.11.2.1.3	Control of re-levelling with doors open		X		X
5.11.2.1.4	Control of inspection operation		X		X
5.11.2.1.5	Control of emergency electrical operation		X		X
5.11.2.2	Stopping devices	X			X
5.11.2.3	Emergency alarm device	X			
5.11.2.4	Priorities and signals		X		
5.11.2.5	Load control	X			
6.2	Specific data, test reports, certificates				X

Subclause	Safety requirements	Test	Measurement	Calculation	Visual inspection
Clause 7	Information for use				**X**
Annex B	Unlocking triangle				**X**
Annex C	Technical dossier				**X**

NOTE Where the Installer uses a type-tested product the test and inspections will be as defined in the product documentation.

6.2 Specific data, test reports and certificates

A copy of each relevant type examination certificate shall be provided for:

a) locking devices;

b) landing doors (i.e. fire test certificate);

c) safety gear;

d) overspeed governors;

e) ascending vehicle overspeed protection means;

f) energy dissipation type buffers, energy accumulation type buffers with buffered return movement and energy accumulation type buffers with nonlinear characteristics;

g) safety circuits containing electronic components.

7 Information for use

7.1 General

All lifts are required to be provided with documentation that shall include an instruction handbook relating to use, maintenance, inspection, periodic checks and rescue operations. All information for use shall be in accordance with EN ISO 12100 and also contain additional provisions for the use of machines within the scope of the standard.

Information for use shall cover, separately or in combination, transport, assembly and installation, commissioning, use (setting, teaching/programming, operation, cleaning, fault finding and maintenance) of the lift, and, if necessary, de-commissioning, dismantling and disposal.

7.2 Signals and warning devices

7.2.1 General provisions

All signs, inscriptions and notices for use shall be of durable material, placed in a conspicuous position and written in clearly legible characters in the language of the country where the lift is in operation.

7.2.2 Inside the car

7.2.2.1 Rated load

The rated load in kilogrammes and the maximum number of persons shall be displayed. The number of persons shall be determined by reference to 5.5.2.3.

The notice shall be made as follows:

"**... kg ... PERS.**"

The minimum height of the characters used for the notice shall be:

a) 10 mm for capital letters and numbers;

b) 7 mm for small letters.

7.2.2.2 Emergency alarm device

Any emergency alarm device specified in 5.11.2.3 shall be coloured yellow and shall be identified by a bell symbol.

The colour yellow shall not be used for other buttons. However, this colour may be used for illuminated 'call registered' signals.

7.2.2.3 Control devices

The control devices shall be clearly identified by reference to their function; for this purpose it is recommended to use:

a) for control buttons the markings −2, −1, 0, 1, 2, 3, etc.;

b) for the door re-open button, where applicable, the indication:

7.2.2.4 Instruction for use

Instructions to ensure safe usage of the lift shall be placed in the car whenever the need for these is apparent.

These shall at least indicate:

a) the instructions for use for lifts with telephones or intercom system, if not self-evident (see EN 81-28:2003);

b) that after using the lift, it is necessary to close manually operated doors and power operated doors where closing is carried out under the continuous control of the users;

c) that the passengers shall take the handrail devices referred to in 5.5.3.2 and that the transported loads shall be fastened.

7.2.3 At the landings

Visible notices or signals shall permit persons in the car to know at which landing the lift has stopped.

7.2.4 At the entrance to the well

Outside of the well, near any inspection or access doors (except landing doors), there shall be a notice stating:

"Lift well - Danger

Access forbidden to unauthorised persons"

Landing doors with manual opening, if they can be confused with other adjacent doors, shall bear the inscription **"LIFT"**.

On goods passenger lifts a sign, which is visible from the landing loading area at all times, shall display the rated load.

7.2.5 At the machinery and pulley spaces

7.2.5.1 A notice bearing the following minimum inscription:

"Lift Machinery - Danger

Access forbidden to unauthorised persons"

shall be fixed to the outside of doors or trap-doors (excluding landing doors and doors of emergency and tests panels) giving access to machinery and pulleys spaces.

In the case of trap-doors, a permanently visible notice shall indicate to those using the trap-door:

"Danger of falling - Reclose the trap-door"

7.2.5.2 Notices shall be provided to permit easy identification of the main switch(es) and the light switch(es).

If, after release of a main switch, some parts remain live (interconnection between lifts, lighting) notice (s) shall indicate this.

7.2.5.3 In the machine room (5.3.3), the machinery cabinet (5.3.5.2) or at the emergency tests panel(s) (5.3.6), there shall be detailed instructions to be followed in the event of lift breakdown, particularly concerning the use of the device for manual or electrical emergency movement, and the unlocking key for landing doors and also the evacuation plan of the site.

7.2.5.4 The direction of movement of the vehicle shall be clearly indicated on the machine, close to the hand winding wheel.

If the wheel is not removable, the indication may be on the wheel itself.

7.2.5.5 On or near the emergency electrical operation buttons, there shall be markings to show the corresponding direction of movement.

7.2.5.6 On or near the stopping device in the pulley room there shall be the word **"STOP"** so placed that there can be no risk of error as to the stop position.

7.2.5.7 The maximum permissible load shall be indicated on the lifting beam or hooks (see 5.3.3.8 and 5.3.4.9).

7.2.5.8 The maximum permissible load shall be indicated on the platform (see 5.3.4.5.3).

7.2.5.9 If in a group of lifts there are parts of different lifts presented in one machine and/or pulley room, each lift shall be identified with a number or letter consistently used for all parts (machine, controller, overspeed governor, switches, etc.).

To facilitate maintenance, etc. on the car roof, in the pit or other places where necessary, the same identification symbol shall appear.

7.2.6 At working stations

On working stations, e.g. on the car roof or an inspection platform, the following information shall be given near the control devices mentioned in 5.5.15 and used for inspection operation:

a) the word "**STOP**" on or near the stopping device(s), so placed that there can be no risk of error as to the stop position ;

b) the words "**NORMAL**" and "**INSPECTION**" on or near the inspection operation switch;

c) the direction of motion on or near the inspection buttons;

d) as mentioned in 5.5.13.3.7 warning sign or a notice at the balustrade.

Furthermore, as mentioned in 5.3.4.3.5 a notice shall be permanently display on the roof when its access is forbidden, and indicate the location of the working station.

7.2.7 In the well

On or near the stop switch in the pit or at the top of the well or near the accesses to the well there shall be the word **"STOP"**, so placed that there can be no risk of error as to the stop position.

In the case of:

— a retractable platform (5.3.4.5) and/or movable stops (5.3.4.5),

— or manually operated mechanical device (5.3.4.3.1, 5.3.4.4.1),

a clear notice(s) giving all the necessary instructions for operation shall be affixed at an appropriate place(s) in the well.

7.2.8 At the control unit

7.2.8.1 Electrical identification

Contactors, relays, fuses and connection strips for circuits coming into the control panels shall be marked in accordance with the wiring diagram. The necessary fuse specifications such as value and type shall be marked on the fuse or on or near the fuse holders.

In the case of the use of multiple wire connectors, only the connector, and not the wires, needs to be marked.

7.2.8.2 Unlocking key for landing doors

The unlocking key shall have a label attached drawing attention to the danger which may be involved in using this key and the need to make sure that the door is locked after it has been closed.

7.2.9 On safety components

7.2.9.1 Device against ascending vehicle overspeed

On the device against ascending vehicle overspeed a data plate shall be fixed indicating:

a) the name of the manufacturer;

b) the type examination certificate number;

c) the actual tripping speed for which it has been adjusted;

d) the type of the ascending vehicle overspeed protection means.

7.2.9.2 Safety gear

On safety gears a data plate shall be fixed indicating:

a) the name of the manufacturer;

b) the type examination certificate number;

c) the type of safety gear.

7.2.9.3 Overspeed governor

On the overspeed governor a data plate shall be fixed indicating:

a) the name of the manufacturer;

b) the type examination certicate number;

c) the type of the overspeed governer;

d) the actual tripping speed for which it has been adjusted.

7.2.9.4 Buffers

On the buffers, other than energy accumulation type buffers, there shall be a data plate showing:

a) the name of the manufacturer;

b) the type examination certificate number;

c) the type of the buffer;

d) the maximum permissible inclination relative to the vertical;

e) the specification of liquid in the case of hydraulic buffers.

7.2.9.5 Door locking devices

On door locking devices a data plate shall be fixed indicating:

a) the name of the manufacturer;

b) the type examination certification number;

c) the type of locking device.

7.2.9.6 Safety devices containing electronic components

On safety devices containing electronic components a data plate shall be fixed indicating:

a) The name of the manufacturer of the safety component;

b) The type examination certificate number;

c) The type of electric safety device.

7.3 Inspection and test

7.3.1 General

Lifts shall be inspected before their first use, after major modifications and at regular intervals.

Such inspections and tests should be made by a competent person in accordance with Annex D.

7.3.2 Constructional inspection and acceptance inspection and test

7.3.2.1 Examination

The technical dossier to be supplied if applying for preliminary authorization shall contain the necessary information to ascertain that the constituent parts are correctly designed and the proposed installation is in conformity with this standard.

This verification can only relate to items, or some of them, which form the subject of an examination or test prior to putting the lift into service.

Annex C might serve as a basis for those who wish to carry out, or to have carried out, a study of an installation before putting it into effect.

It may be required in the case of lifts which have not been subject to application for a preliminary authorization, to supply all or some of the technical information and calculations which appear in Annex C.

7.3.2.2 Documentation

The constructional inspection and acceptance inspection and test shall be carried out at the job-site on completion of the lift.

For the constructional inspection and acceptance inspection and test, the data specified in 6.2 should form part of a pre-completed test sheet. Furthermore, layout drawings, description of the equipment and wiring diagrams (current flow chart with legend or explanations, and a terminal connection chart) which permit a check of compliance with the safety requirements specified in this standard, shall be provided.

7.3.3 Periodical examinations and tests

Periodical examinations and tests on lifts should be carried out after they are put into service to verify that they are in good condition. These periodical examinations and tests should be carried out in accordance with Annex E.

Where the functional verification of the safety devices listed in the Tables A.1 and A.2 is not possible during normal operation of the lift, information shall be provided in the instruction manual to enable the functional verification to be carried out:

Examinations and tests should be carried out after important modifications or after an accident to ascertain that lifts continue to conform to this standard. These examinations and tests should be carried out in accordance with Annex E.

7.4 Accompanying documents (in particular, instruction handbook)

7.4.1 Contents

The instruction handbook or other written instructions shall contain among others:

a) information relating to the lift itself, e.g.:

1) detailed description, its fittings, its guards and/or protective devices;

2) comprehensive range of applications for which the lift is intended, including prohibited usages, if any, taking into account variations of the original machine if appropriate;

3) diagrams (especially schematic representation of safety functions and layout details);

4) technical documentation about electric equipment (see EN 60204 series [5]);

5) documents attesting that the lift complies with the relevant directives;

6) documents specifying the grade of the slip resistance of the car floor;

b) information relating to the use of the lift, e.g. about:

1) intended use:

i) keeping the doors giving access to machinery and pulley spaces locked;

ii) safe loading and unloading ;

iii) precaution to be taken in case of lifts with partially enclosed well (5.2.2.3.2 d);

iv) events needing the intervention of a competent person;

v) keeping the documentation;

vi) the use of the emergency unlocking key;

vii) rescue operation.

2) description of manual controls (actuators);

3) setting and adjustment;

4) risks which could not be eliminated by the protective measures taken by the designer;

5) preventing arrangements in the vicinity of the lift which encourages misuse;

6) particular risks which may be generated by certain applications

7) reasonably foreseeable misuse and prohibited usages;

8) fault identification and location, repair, and restarting after an intervention;

9) investigations and necessary corrective actions in case of faults requiring manual reset, to be taken before reset and restart;

c) information for maintenance, e.g.:

1) necessity to follow the requirements of EN 13015:2001+A1:2008 for lifts;

2) personal protective equipment which need to be used and training required;

3) nature and frequency of inspections;

4) instructions relating to maintenance operations which require a definite technical knowledge or particular skills and hence should be carried out exclusively by skilled persons (e.g. maintenance staff, specialists);

5) instructions relating to maintenance actions (e.g. replacement of parts) which do not require specific skills and hence may be carried out by the owner;

6) drawings and diagrams enabling maintenance personnel to carry out their task rationally (especially fault-finding tasks);

7) instructions relating to cleaning and refurbishment;

8) necessity for the maintainer to observe a complete travel of the vehicle before making the lift available to the public after maintenance;

9) instructions on the necessary use of inspection controls during maintenance and repair work;

d) information about periodic inspection and tests to ascertain whether the lift is safe in operation, including:

1) electric safety devices with regard to their effective operation;

2) brake(s)

3) driving elements for visible signs of wear and tear

4) vehicle and ropes for defects, true run and guidance;

5) dimensions and tolerances specified in this standard;

6) doors;

7) interior panel of the car;

8) test of the electric continuity of the connection between the earth terminal(s) in the machinery space and the different parts of the lift liable to be live accidentally;

e) information for emergency situations, e.g.:

1) the operating method to be followed in the event of accident or breakdown;

2) use of emergency electrical operation,

3) warning about possible emission or leakage of harmful substance(s), and if possible indication of means to fight their effects;

f) a declaration that the emission sound pressure level measured under free field conditions at a distance of 1,00 metre from the surface of the machinery and at a height of 1,60 metres from the floor plate is expected not to exceed 70 dB(A).

7.4.2 Presentation of the instruction handbook

7.4.2.1 Type and size of print shall ensure the best possible legibility. Warning signs and/or cautions should be emphasized by the use of colours, symbols and/or large print.

7.4.2.2 Information for use shall be given in the language(s) of the country in which the lift will be used. If more than one language is to be used, each language should be readily distinguished from the other(s), and efforts should be made to keep the translated text and the relevant illustration together.

7.4.2.3 Whenever helpful to the understanding, text should be supported by illustrations. Illustrations should be supplemented with written details enabling, for instance, manual controls (actuators) to be located and identified; they should not be separated from the accompanying text and should follow sequential operations.

7.4.2.4 Consideration should be given to presenting information in tabular form where this will aid understanding. Tables should be adjacent to the relevant text.

7.4.2.5 The use of colours should be considered, particularly in relation to components requiring quick identification.

7.4.2.6 When information for use is lengthy, a table of contents and/or an index should be given.

7.4.2.7 Safety-relevant instructions which involve immediate action should be provided in a form readily available to the operator.

7.4.3 Advice for drafting and editing information for use

7.4.3.1 The information shall clearly relate to the specific model of lift.

7.4.3.2 When information for use is being prepared, the communication process “see – think – use” should be followed in order to achieve the maximum effect and should follow sequential operations. The questions “how?” and “why?” should be anticipated and the answers provided.

7.4.3.3 Information for use shall be as simple and as brief as possible, and should be expressed in consistent terms and units with a clear explanation of unusual technical terms.

7.4.3.4 Documents giving instructions for use should be produced in durable form (i.e. they should be able to survive frequent handling). It may be useful to mark them “keep for future reference”. Where information for use is kept in electronic form (e.g. CD, DVD, tape) information on safety-related issues that need immediate action shall always be backed up with a hard copy that is readily available.

7.4.4 Register

7.4.4.1 General

The basic characteristics of the lift shall be recorded in a register, or file, drawn up at the latest at the time the installation is put into service.

This register or file should be available to those in charge of the maintenance, and to the person or organization responsible for the periodical examinations and tests.

7.4.4.2 Technical section

This shall give information about:

a) the date the lift was put into service;

b) the basic characteristics of the lift;

c) the characteristics of the ropes and/or chains;

d) the characteristics of those parts for which verification of conformity is required (7.3.2.1);

e) the plans of installation in the building;

f) electric schematic diagrams (using CENELEC symbols);

   The circuit diagrams may be limited to the circuits for the overall understanding of the safety considerations. The abbreviations used with the symbols shall be explained by means of a nomenclature;

g) the evacuation plan of the site.

7.4.4.3 Section for reports and observations

This section shall keep duplicate dated copies of examination and inspection reports, with observations.

This register or file shall be kept up-to-date in case of:

a) important modifications to the lift (Annex E);

b) replacement of ropes or important parts;

c) accidents.

7.4.5 Marking in the car

The following indications shall be marked legibly and indelibly in the car:

a) the name of the installer;

b) year of construction;

c) designation of series or type, if any;

d) serial or identification number, if any.

Annex A
(normative)

List of the safety contacts

Table A.1 — List of the electric safety devices

Subclause	Devices checked	SIL
5.2.2.4.2.4	Check on closed position of inspection and emergency doors and inspection traps	2
5.2.7.4.4 a)	Stopping device in the pit	2
5.3.4.3.1 b)	Check of the inactive position of the mechanical device	3
5.3.4.3.3 e)	Check of the closed position of the inspection traps and doors in the car	2
5.3.4.4.1 e)	Check of the opening by use of a key of a door giving access to the pit	2
5.3.4.4.1 f)	Check of the inactive position of the mechanical device	3
5.3.4.4.1 g)	Check of the active position of the mechanical device	3
5.3.4.5.4 a)	Check of the fully retracted position of the retractable platform	3
5.3.4.5.5 b)	Check of the fully retracted position of the movable stops	3
5.3.4.5.5 c)	Check the fully extended position of the movable stops	3
5.3.4.6.1 e)	Check of the closed position of the access door	2
5.3.7.1.6	Stopping device in the pulley room	1
5.4.7.3.2	Check on locking of landing doors: - automatically operated landing doors in accordance with 5.4.7.4.2; - manually operated landing doors	2 3
5.4.7.3.3.1	Check on closed position of landing doors	3
5.4.7.6.2	Check on closed position of the panels without locks	3
5.5.9.2	Check on closed position of car door	3
5.5.12.4.2	Check on locking of the emergency trap and the emergency door in car	2
5.5.15 b)	Stopping device on the car roof	3
5.6.5.5	Check on the abnormal relative extension of a rope or chain in case of two ropes or two chain type suspension	1
5.6.6.1 e)	Check on the tension in the compensation ropes	3
5.6.6.2	Check on the anti-rebound device	3
5.6.8.8	Check on the operation of safety gear	1
5.6.9.8.1	Over speed detection without actuating the ascending vehicle overspeed protection means	1
5.6.9.8.1	Over speed detection actuating the ascending vehicle over speed protection means	2
5.6.9.8.2	Check on the release of the over speed governor	3
5.6.9.8.3	Check on the tension in the over speed governor rope	3
5.6.10.6	Check on the ascending vehicle over speed protection means	1
5.6.11.6	Detection of unintended vehicle movement with open doors	3

Subclause	Devices checked	SIL
5.6.11.7	Check the activation of the unintended vehicle movement with open doors protection means	3
5.7.4.3.4	Check on the return to normal extended position of buffers	3
5.7.5.2.3 b)	Check on the tension in the device for transmission of the vehicle position (final limit switches)	1
5.7.5.3.1 b) 2)	Final limit switches for traction drive lifts	1
5.8.2.1 b)	Check on locking of car door	2
5.9.5.1	Check on the positions of the removable means for manual emergency operation	1
5.9.8.4 c)	Check on the tension in the device for transmission of the vehicle position (slowdown checking device)	2
5.9.8.5	Check on retardation in the case of reduced stroke buffers	2
5.9.9	Check for slack rope or slack chain for positive drive lifts	2
5.10.4.4	Control of main switch by means of circuit breaker contactor	2
5.11.2.1.3 a) 2)	Check on re-levelling	2
5.11.2.1.3 a) 3)	Check on the tension in the device for transmission of the vehicle position (levelling and re-levelling)	2
5.11.2.1.4.2 c)	Stopping device with inspection operation	3
5.11.2.2.1 f)	Stopping device at lift machine	2
5.11.2.2.1 g)	Stopping device at emergency and tests panel(s)	2

Table A.2 — Electric safety devices requiring classification of safety function when used in conjunction with programmable electronic systems (PESSRAL)

Subclause	Devices checked	SIL
5.11.2.1.4.2	Inspection operation switch	3
5.11.2.1.5	Emergency electrical operation switch	3

NOTE The classification in the above Tables A1 and A2 applies only when programmable electronic systems (PESSRAL) are used. This classification is not a risk classification for safety contacts or safety circuits but a classification to define the safety integrity level for the PESSRAL to be used in the corresponding electric safety device.”

Annex B
(normative)

Unlocking triangle

Dimensions in millimetres

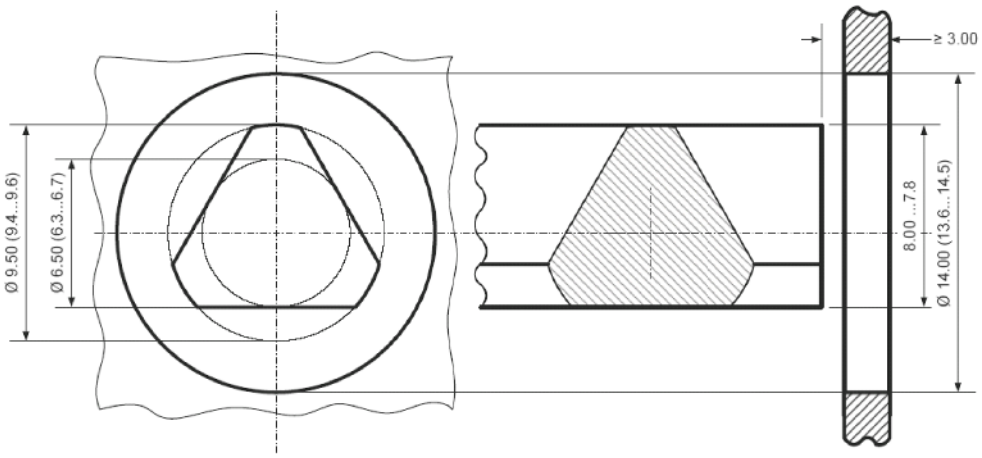

Figure B.1 — Unlocking triangle

Annex C
(informative)

Technical dossier

C.1 Introduction

The technical dossier to be submitted with the application for preliminary authorization should comprise all or part of the information and documents figuring in the following list.

C.2 General

a) Names and addresses of the installer, the owner and/or the user;

b) address of the installation premises;

c) type of equipment - rated load - rated speed - number of passengers;

d) travel of the lift, number of landings served;

e) mass of the vehicle and of the counterweight or balancing weight;

f) means of access to the machinery and pulley spaces;

g) inclination of the guide rails.

C.3 Technical documents and plans

Necessary documents (plans sections, notes) in order to understand the lift installation, including spaces for machines, pulleys and apparatus.

These documents do not have to give details of construction, but they should contain the necessary particulars to check conformity to this standard, and particularly the following:

a) clearances at the top of the well and in the pit (5.2.7.1, 5.2.7.2, 5.2.7.3);

b) any accessible spaces which exist below the well (5.2.5);

c) access to the well, to the pit (5.2.7.4.2);

d) guards between lifts if there are more than one in the same well (5.2.6.2);

e) provision for holes for fixings;

f) position and principal dimensions of the machine spaces with the layout of the machine and principal devices. Dimensions of the traction sheave or the drum. Ventilation holes. Reaction loads on the building and at the bottom of the pit;

g) access to the machinery spaces (5.3.2);

h) position and principal dimensions of the pulley spaces, if any. Position and dimensions of pulleys;

i) position of other devices in the pulley spaces;

j) access to the pulley spaces (5.3.7.1.4);

k) arrangement and principal dimensions of landing doors (5.4.3). It is not necessary to show all the doors if they are identical and if the distances between the landing door sills are indicated;

l) arrangement and dimensions of inspection doors and inspection traps and emergency doors (5.2.2.4);

m) dimensions of the car and of its entrances (5.5.1, 5.5.2);

n) distances from the sill and from the car door to the inner surface of the well wall (5.8.2.1 and 5.8.2.2);

o) horizontal distance between the closed car and landing doors measured as indicated in 5.8.2.3;

p) principal characteristics of the suspension – safety factor- ropes (number, diameter, composition, breaking load) - chains (type, composition, pitch, breaking load) - compensation ropes (where provided);

q) calculation of the safety factor (Annex L);

r) principal characteristics of the overspeed governor rope and/or safety rope: diameter, composition, breaking load, safety factor;

s) dimensions and proof of the guide rails, condition and dimensions of the rubbing surfaces (drawn, milled, ground);

t) dimensions and proof of energy accumulation type buffers with linear characteristics.

u) protection of the well as indicated in 5.2.2

v) evacuation plan of the site;

w) traction calculation, see Annex K.

C.4 Electric schematic diagrams

Outline electric schematic diagrams of:

a) the power circuits, and

b) the circuits connected with electric safety devices.

These schematic diagrams should be clear and use CENELEC symbols.

C.5 Verification of conformity

Copies of type examination certificate for safety components.

Copies of certificates for other components (ropes, chains, explosion proof equipment, glass, etc.) where relevant.

Setting up certificate for the safety gear according to the instructions provided by the safety gear manufacturer and calculation of the compression of the springs in the case of progressive safety gear.

Annex D
(normative)

Examinations and tests before putting into service

D.1 General

Before the lift is put into service, the following examinations and tests shall be carried out to support particular verifications as mentioned in Clause 6:

D.2 Examinations

These examinations shall cover in particular the following points:

a) if there has been a preliminary authorization, comparison of the documents submitted on that occasion (Annex C) with the installation as it has been installed;

b) in all cases, verification that the requirements of this standard are fulfilled;

c) visual examination of the application of the rules of good construction of the components for which this standard has no special requirements;

d) comparison of the details given in the verification of conformity for the safety components, with the characteristics of the lift.

D.3 Tests and verifications

These tests and verifications shall cover the following points:

a) locking devices (5.4.7);

b) electric safety devices (Annex A);

c) suspension elements and their attachments:

It shall be verified that their characteristics are those indicated in the register or file (7.3.2.2);

d) braking system (5.9.4):

1) **Minimum efficiency:**

The test shall be carried out in the worst configuration ”(e.g change of inclination) with 125 % of the rated load and interrupting the supply to the motor and the brake;

2) **Maximum retardation:**

The test shall be carried out in the worst configuration ”(e.g change of inclination) with the rated load and interrupting the supply to the motor and the brake. The horizontal component of the retardation shall remain less than the referred values in 5.9.4.2.1.

e) measurements of current or power and of speed (5.9.6);

f) electric wiring:

1) measurement of the insulation resistance of the different circuits (5.10.1.3); for this measurement all the electronic components are to be disconnected;

2) verification of the electrical continuity of the connection between the main earth terminal of the machinery spaces and the different parts of the lift liable to be made live accidentally ;

g) final limit switches (5.7.5);

h) checking of the traction (5.6.3):

1) The traction shall be checked by making several stops with the most severe braking compatible with the installation. At each test, complete stoppage of the vehicle shall occur and the test shall be carried out:

i) ascending, with the car empty, in the upper part of the travel;

ii) descending, with the car loaded with 125 % of the rated load, in the lower part of the travel;

2) It will be checked that the empty car cannot be raised, when the counterweight rests on its compressed buffer;

3) It shall be checked that the balance is as stated by the installer ;

This check can be made by means of measurements of current combined with:

i) speed measurements for AC motors ;

ii) voltage measurements for DC motors ;

i) overspeed governor (5.6.9):

1) The tripping speed of the overspeed governor shall be checked in the direction corresponding to the descent of the vehicle (5.6.9.1.1 and 5.6.9.1.2) or the counterweight (5.6.9.1.3);

2) The operation of the stopping control laid down in 5.6.9.8.1 and 5.6.9.8.2 shall be checked in both directions of movement;

j) vehicle safety gear (5.6.8):

The energy which the safety gear is capable of absorbing at the moment of engagement will have been verified in accordance with F.2. The aim of the test before putting into service is to check the correct mounting, correct setting and the soundness of the complete assembly, comprising vehicle, safety gear, guide rails and their fixing to the building.

The test shall be made in the part of the trajectory with the most inclination while the vehicle is descending, with the required load uniformly distributed over the car area, with the machine running until the ropes slip or become slack, and under the following conditions:

1) For instantaneous safety gear with buffered effect, the car shall be loaded with the rated load, and travel at rated speed;

2) In case of a progressive safety gear, the car shall be loaded with 125 % of the rated load, and travel at rated speed or lower.

Furthermore a test shall be done with empty car at rated speed (or lower for progressive safety gear) in the part of trajectory with the least inclination.

After the test, it shall be ascertained that no deterioration, which could adversely affect the normal use of the lift has occurred. If necessary, friction components may be replaced. Visual check is considered to be sufficient.

As the installer brings the proof (calculations or tests laboratory reports, etc.) that the installation has been designed to satisfy the goals required in 5.6.8.4, a test with the rated load at rated speed in the part of the trajectory with the most inclination and a test with empty car at rated speed in the part of the trajectory with the least inclination shall be sufficient.

If the ratio of the mass of the vehicle to rated load is greater than or equal to 2, it shall be verified with a unique test with the rated load at the rated speed that the average value of a_h remains between 0,1 $g \cdot \sin \theta$ and 0,25 g. In this particular case, the objectives defined in 5.6.8.4 shall be satisfied.

k) counterweight or balancing weight safety gear (5.6.8):

The energy, which the safety gear is capable of absorbing at the moment of engagement, will have been verified in accordance with F.2. The aim of the test before putting into service is to check the correct mounting, correct setting and the soundness of the complete assembly, comprising counterweight or balancing weight, safety gear, guide rails and their fixing to the building.

The test shall be made with an empty car at rated speed or lower while the counterweight or the balancing weight is descending, with the machine running until the ropes slip or become slack.

When the test is made with lower than rated speed, the manufacturer shall provide curves to illustrate the behaviour of the type tested progressive safety gear under counterweight or balancing weight application when dynamically tested with the suspensions attached.

After the test, it shall be ascertained that no deterioration, which could adversely affect the normal use of the lift has occurred. If necessary, friction components may be replaced. Visual check is considered to be sufficient;

l) buffers (5.7.3, 5.7.4):

1) energy accumulation type buffers:

The test shall be carried out in the following manner: the vehicle with its rated load shall be placed on the buffer(s), the ropes shall be made slack and it shall be checked that the compression corresponds to the figures given in the technical dossier according to C.3 and means to identify the buffers according to C.5;

2) energy accumulation type buffers with buffered return movement and energy dissipation type buffers:

The test shall be made in the following manner: the vehicle with its rated load and the counterweight shall be brought into contact with the buffers at the rated speed or at the speed for which the stroke of the buffers has been calculated, in the case of the use of reduced stroke buffers with verification of the retardation (5.7.4.3.2).

After the test, it shall be ascertained that no deterioration, which could adversely affect the normal use of the lift has occurred. Visual check is considered to be sufficient;

m) alarm device (5.11.2.3): functional test;

n) ascending vehicle overspeed protection means (5.6.10):

The test shall be made while the empty car is ascending in its worst configuration with a speed not lower than the rated speed, using only this device for braking.

o) functional tests of the following devices:

1) mechanical device for preventing movement of the vehicle (5.3.4.3.1);

2) mechanical device for stopping the vehicle (5.3.4.4.1). Special attention shall be given to safety gear used as mechanical device, e.g. when tripped at the emergency operation speed and car empty;

3) platform (5.3.4.5);

4) mechanical device for blocking the vehicle or movable stops (5.3.4.5.2);

5) devices for emergency and tests operations (5.3.6).

6) stopping of the car at landings and levelling accuracy (5.9.12)

   i) the stopping accuracy of the car shall be verified to be in compliance with 5.9.12, at all landings, and in both directions for intermediate floors;

   ii) verify that the car maintains levelling accuracy as per 5.9.12 during loading and unloading conditions. This verification shall be made at the most unfavourable floor.

p) unintended vehicle movement protection means (5.6.11)

The type-examination has demonstrated the functionality of the means. The aim of the test before putting into service is to check detection, and stopping elements.

Test-requirements:

Only the stopping element of the means defined in 5.6.11 shall be used for the tests for stopping the lift.

The test shall:

1) consist of verifying that the stopping element of the means is triggered as required by type examination;

2) be made by moving the empty car in up direction in the upper part of the well (e.g. from one floor from top terminal) and fully loaded car in down direction in the lower part of the well (e.g. from one floor from bottom terminal) with a 'pre-set' speed, e.g. as defined during type testing, (inspection speed, etc.);

NOTE 1 The full load test is not required if the efficiency of the stopping elements has already been verified during other suitable tests.

The test, as defined by the type-examination, shall confirm that the unintended movement distance will not exceed the value given in 5.6.11.5.

If the means requires self-monitoring (5.6.11.3), this shall be verified.

NOTE 2 If the stopping element of the means involves elements present at landing floors, it could be necessary to repeat the test for each concerned landing.

q) checking of the slowdown (5.9.8):

The objective of the test is to verify that the sensors are positioned correctly and to check that the monitoring slowdown of the machine (5.9.8) ensures a buffer impact speed appropriate to the stroke of the buffer.

Annex E
(informative)

Periodical examinations and tests, examinations and tests after an important modification or after an accident

E.1 Periodical examinations and tests

Periodical examinations and tests shall not be more stringent than those required before the lift was the first time put into service.

These periodical tests should not, through their repetition, cause excessive wear or impose stresses likely to reduce the safety of the lift. This is the case in particular of the test on components such as the safety gear and the buffers. If tests on these components are made, they shall be carried out with empty car and at a reduced speed.

The person appointed to make the periodical test should ensure himself that these components (which do not operate in normal service) are still in an operating condition.

A duplicate copy of the report should be attached to the register or file in the part covered by 7.3.2.2.

E.2 Examinations and tests after an important modification or after an accident

The important modifications and accidents shall be recorded in the technical part of the register or file covered in 7.3.2.2.

In particular, the following are considered as important modifications:

a) change of:

   1) the rated speed;

   2) the rated load;

   3) the mass of the vehicle ;

   4) the travel;

b) change or replacement of:

   1) type of locking devices (the replacement of a locking device by a device of the same type is not considered as an important modification);

   2) control system;

   3) guide rails or the type of guide rails;

   4) the type of door (or the addition of one or more landing or car doors);

   5) machine or the traction sheave;

   6) the overspeed governor;

7) ascending vehicle overspeed protection means;

8) buffers;

9) safety gear;

10) mechanical device for preventing movement of the vehicle (5.3.4.3.1);

11) mechanical device for stopping the vehicle (5.3.4.4.1);

12) platform (5.3.4.5);

13) mechanical device for blocking the vehicle or movable stops (5.3.4.5.2);

14) devices for emergency and tests operations (5.3.6).

15) slowdown monitoring.

16) the unintended vehicle movement protection.

For the tests after an important modification or after an accident the documents and the necessary information shall be submitted to the responsible person or organization. Such person or organization will decide on the advisability of carrying out tests on the modified or replaced components.

These tests will, at the most, be those required for the original components before the lift was put into service.

Annex F
(normative)

Safety components - Test procedures for verification of conformity

F.0 Introduction

F.0.1 General provisions

F.0.1.1 For the purposes of this standard it is assumed that the laboratory undertakes both the testing and the certification as an approved body. An approved body may be that of a manufacturer operating an approved full quality assurance system. In certain cases the test laboratory and the body approved for the issue of type examination certificates may be separate. In these cases the administrative procedures may differ from those described in this annex.

F.0.1.2 The application for type examination shall be made by the manufacturer of the component or his authorized representative and shall be addressed to an approved test laboratory.

At the request of the laboratory the necessary documents may be required in triplicate. The laboratory may likewise call for supplementary information, which might be necessary for the examination and tests.

F.0.1.3 The despatch of samples for examination shall be made by agreement between the laboratory and the applicant.

F.0.1.4 The applicant may attend the tests.

F.0.1.5 If the laboratory entrusted with the complete examination of one of the components requiring the supply of a type examination certificate has not available appropriate means for certain tests or examinations, it may under its responsibility have these made by other laboratories.

F.0.1.6 The precision of the instruments shall allow, unless particularly specified, measurements to be made within the following accuracy:

a) ± 1 % for masses, forces, distances, speeds;

b) ± 2 % for accelerations, retardations;

c) ± 5 % for voltages, currents;

d) ± 5 °C for temperatures;

e) Recording equipment shall be capable of detecting signals, which vary in time of 0,01 s.

F.0.2 Model form of type examination certificate

The examination certificate shall contain the following information:

MODEL TYPE-EXAMINATION CERTIFICATE

Name of the approved body .....

……

Type-examination certificate ..... …

..... …

Type-examination N° …….

1 Category, type and make or trade name ……

2 Manufacturer's name and address ..... …

……...

3 Name and address of certificate holder ..... …

…….....

4 Date of submission for type-examination ..... …

5 Certificate issued on the basis of the following requirement ..... …

……

6 Test laboratory ..... …

7 Date and number of laboratory report ..... …

8 Date of type-examination ..... …

9 The following documents, bearing the type-examination number shown above, are annexed to this certificate ..... …

……

10 Any additional information ..... …

……

Place ……. (Date) ……....

(Signature) …….

F.1 Landing door locking devices

F.1.1 General provisions

F.1.1.1 Field of application

These procedures are applicable to locking devices for lift landing doors. It is understood that each component taking part in the locking of landing doors and in the checking of the locking forms part of the locking device.

F.1.1.2 Object and extent of the test

The locking device shall be submitted to a test procedure to verify that insofar as construction and operation are concerned, it conforms to the requirements imposed by this standard.

It shall be checked in particular that the mechanical and electrical components of the device are of adequate size and that in the course of time the device does not lose its effectiveness, particularly through wear.

If the locking device is needed to satisfy particular requirements (waterproof, dust proof or explosion proof construction) the applicant shall specify this and supplementary examinations and/or tests under appropriate criteria shall be made.

F.1.1.3 Documents to be submitted for a type test

F.1.1.3.1 Schematic arrangement drawing with description of operation

This drawing shall show clearly all the details relating to the operation and the safety of the locking device, including:

a) the operation of the device in normal service showing the effective engagement of the locking elements and the point at which the electrical safety device operates;

b) the operation of the device for mechanical checking of the locking position if this device exists;

c) the control and operation of the emergency unlocking device;

d) the type (AC and/or DC) and the rated voltage and rated current.

F.1.1.3.2 Assembly drawing with key

This drawing shall show all parts, which are important to the operation of the locking device, in particular those required to conform to requirements of this standard. A key shall indicate the list of principal parts, the type of materials used, and the characteristics of the fixing elements.

F.1.1.4 Test samples

One door locking device shall be submitted to the laboratory.

If the test is carried out on a prototype, it shall be repeated later on a production model.

If the test of the locking device is only possible when the device is mounted in the corresponding door (for example, sliding doors with several panels or hinged doors with several panels) the device shall be mounted on a complete door in working order. However, the door dimensions may be reduced by comparison with a production model, on condition that this does not falsify the test results.

F.1.2 Examination and tests

F.1.2.1 Examination of operation

This examination has the aim of verifying that the mechanical and electrical components of the locking device are operating correctly with respect to safety, and in conformity with the requirements of this standard, and that the device is in conformity with the particulars provided in the application.

In particular it shall be verified:

a) that there is at least 7 mm engagement of the locking elements before the electric safety device operates. Examples are shown in 5.4.7.3.2.2.

b) that it is not possible from positions normally accessible to persons to operate the lift with a door open or unlocked, after one single action, not forming part of the normal operation (5.4.7.5.1).

F.1.2.2 Mechanical tests

F.1.2.2.1 General provisions

These tests have the purpose of verifying the strength of the mechanical locking components and the electrical components.

The sample to the locking device in its normal operating position is controlled by the devices normally used to operate it.

The sample shall be lubricated in accordance with the requirements of the manufacturer of the locking device.

When there are several possible means of control and positions of operation, the endurance test shall be made in the arrangement which is regarded as the most unfavourable from the point of view of the forces on the components.

The number of complete cycles of operation and the travel of the locking components shall be registered by mechanical or electrical counters.

F.1.2.2.2 Endurance test

F.1.2.2.2.1 The locking device shall be submitted to 1 000 000 (±1 %) complete cycles; one cycle comprises one forward and return movement over the full travel possible in both directions.

The driving of the device shall be smooth, without shocks, and at a rate of 60 (±10 %) cycles per minute.

During the endurance test the electrical contact of the lock shall close a resistive circuit under the rated voltage and at a current value double that of the rated current.

F.1.2.2.2.2 If the locking device is provided with a mechanical checking device for the locking pin or the position of the locking element, this device shall be submitted to an endurance test of 100 000 (±1 %) cycles.

The driving of the device shall be smooth, without shocks, and at a rate of 60 (±10 %) cycles per minute.

F.1.2.2.3 Static test

For locking devices intended for hinged doors, a test shall be made consisting of the application over a total period of 300 s of a static force increasing progressively to a value of 3 000 N.

This force shall be applied in the opening direction of the door and in a position corresponding as far as possible to that which may be applied when a user attempts to open the door. The force applied shall be 1 000 N in the case of a locking device intended for sliding doors.

F.1.2.2.4 Dynamic test

The locking device, in the locked position, shall be submitted to a shock test in the opening direction of the door.

The shock shall correspond to the impact of a rigid mass of 4 kg falling in free fall from a height of 0,50 m.

F.1.2.3 Criteria for the mechanical tests

After the endurance test (F.1.2.2.2), the static test (F.1.2.2.3) and the dynamic test (F.1.2.2.4), there shall not be any wear, deformation or breakage, which could adversely affect safety.

F.1.2.4 Electrical test

F.1.2.4.1 Endurance test of contacts

This test is included in the endurance test laid down in F.1.2.2.2.1.

F.1.2.4.2 Test of ability to break circuit

F.1.2.4.2.1 This test shall be carried out after the endurance test. It shall check that the ability to break a live circuit is sufficient. This test shall be made in accordance with the procedure in EN 60947-4-1:2010 and EN 60947-5-1:2004, the values of current and rated voltage serving as a basis for the tests shall be those indicated by the manufacturer of the device.

If there is nothing specified, the rated values shall be as follows:

a) alternating current: 230 V, 2 A;

b) direct current: 200 V, 2 A..

In the absence of an indication to the contrary, the capacity to break circuit shall be examined for both AC and DC conditions.

The tests shall be carried out with the locking device in the working position. If several positions are possible, the test shall be made in the most unfavourable position.

The sample tested shall be provided with covers and electric wiring as used in normal service.

F.1.2.4.2.2 AC locking devices shall open and close an electric circuit under a voltage equal to 110 % of the rated voltage 50 times, at normal speed, and at intervals of 5 s to 10 s. The contact shall remain closed for at least 0,5 s.

The circuit shall comprise a choke and a resistance in series. Its power factor shall be 0,7 ± 0,05 and the test current shall be 11 times the rated current indicated by the manufacturer of the device.

F.1.2.4.2.3 DC locking devices shall open and close an electric circuit under a voltage equal to 110 % of the rated voltage 20 times, at normal speed, and at intervals of 5 s to 10 s. The contact shall remain closed for at least 0,5 s.

The circuit shall comprise a choke and a resistance in series having values such that the current reaches 95 % of the steady-state value of the test current in 300 ms.

The test current shall be 110 % of the rated current indicated by the manufacturer of the device.

F.1.2.4.2.4 The tests are considered as satisfactory if no tracking or arcing is produced and if no deterioration occurs which could adversely affect safety.

F.1.2.4.3 Test for resistance to leakage currents

This test shall be made in accordance with the procedure in CENELEC HD 214 S2. The electrodes shall be connected to a source providing an AC voltage which is sinusoidal at 175 V, 50 Hz.

F.1.2.4.4 Examination of clearances and creepage distances

The clearances in air and creepage distances shall be in accordance with 5.11.1.2.2.4.

F.1.2.4.5 Examination of the requirements appropriate to safety contacts and their accessibility

This examination shall be made taking account of the mounting position and the layout of the locking device, as appropriate.

F.1.3 Test particular to certain types of locking devices

F.1.3.1 Locking device for horizontally or vertically sliding doors with several panels

The devices providing direct mechanical linkage between panels according to 5.4.7.6.1 or indirect mechanical linkage according to 5.4.7.6.2 are considered as forming part of the locking device.

These devices shall be submitted in a reasonable manner to the tests mentioned in F.1.2. The number of cycles per minute in such endurance tests shall be suited to the dimensions of the construction.

F.1.3.2 Flap type locking device for hinged door

F.1.3.2.1 If this device is provided with an electric safety device required to check the possible deformation of the flap and if, after the static test envisaged in F.1.2.2.3 there are any doubts on the strength of the device, the load shall be increased progressively until the safety device begins to open. No component of the locking device or of the landing door shall be damaged or permanently deformed by the load applied.

F.1.3.2.2 If, after the static test, the dimensions and construction leave no doubt as to its strength, it is not necessary to proceed to the endurance test on the flap.

F.1.4 Type examination certificate

F.1.4.1 The certificate shall be drawn up in triplicate, i.e. two copies for the applicant, and one for the laboratory.

F.1.4.2 The certificate shall indicate the following:

a) information according to F.0.2;

b) type and application of locking device;

c) the type (AC and/or DC) and values of rated voltage and rated current;

d) in the case of flap type door locking devices: the necessary force to actuate the electric safety device for checking the elastic deformation of the flap.

F.2 Safety gear

F.2.1 General provisions

F.2.1.1 The applicant shall state the range of use provided, i.e.:

a) minimum and maximum masses and the corresponding braking forces;

b) maximum rated speed and maximum tripping speed of the overspeed governor;

c) the inclination of the guide rails;

d) the environmental conditions (especially for the range of temperature).

F.2.1.2 The following documents shall be attached to the application:

a) detailed assembly drawings showing the construction, operation, materials used, the dimensions and tolerances on the construction components;

b) in the case of progressive safety gear, also a load diagram relating to elastic parts.

F.2.2 Progressive safety gear or instantaneous safety gear with buffered effect

F.2.2.1 Statement and test sample

F.2.2.1.1 The applicant shall state for what mass in kilogrammes and tripping speed in metres per second of the overspeed governor the test is to be carried out. If the safety gear has to be certified for various masses, he shall specify them and indicate in addition whether adjustment is by stages or continuous.

The applicant should choose the suspended mass in kilogrammes by dividing the anticipated braking force in newtons by 16 to aim at an average retardation of 0,6 g_n.

F.2.2.1.2 A complete safety gear assembly mounted on a cross-piece, with the dimensions fixed by the laboratory, together with the number of brake shoes necessary for all the tests shall be placed at the disposal of the laboratory. The number of sets of brake shoes necessary for all the tests shall be attached. For the type of guide rail used, the length specified by the laboratory shall also be supplied.

F.2.2.2 Test

F.2.2.2.1 Method of test

The test shall be carried out in free fall. Direct or indirect measurements shall be made of:

a) the total height of the fall;

b) the total braking distance

c) the sliding distance of the overspeed governor rope, or that of the device used in its place;

d) the total travel of the elements forming the spring.

Measurements a) and b) shall be recorded as a function of the time.

The following shall be determined:

1) the average braking force;

2) the greatest instantaneous braking force;

3) the smallest instantaneous braking force.

F.2.2.2.2 Test procedure

F.2.2.2.2.1 Safety gear certified for a single mass

The laboratory shall carry out four tests with the mass (P + Q). Between each test the friction parts shall be allowed to return to their normal temperature.

During the tests several identical sets of friction parts may be used.

However, one set of parts shall be capable of three tests.

The height of free fall shall be calculated to correspond to the maximum tripping speed of the overspeed governor for which the safety gear can be used.

The engagements of the safety gear shall be achieved by a means allowing the tripping speed to be fixed precisely.

For example, a rope may be used, the slack of which should be carefully calculated, fixed to a sleeve which can slide with friction over a fixed smooth rope. The friction effort should be the same as the effort applied to the operating rope by the governor attached to this safety gear.

F.2.2.2.2.2 Safety gear certified for different masses

Adjustment in stages or continuous adjustment.

Two series of tests shall be carried out for:

a) the maximum, and

b) the minimum value applied for.

The applicant shall supply a formula, or a chart, showing the variation of the braking force as a function of a given parameter.

The laboratory shall verify by suitable means (in the absence of anything better, by a third series of tests for intermediary points) the validity of the supplied formula.

F.2.2.2.3 Determination of the braking force of the safety gear

F.2.2.2.3.1 Safety gear certified for a single mass

The braking force of which the safety gear is capable for the given adjustment and the type of guide rail is taken as equal to the average of the average braking forces determined during the tests. Each test shall be made on an unused section of guide rail.

A check shall be made that the average values determined during the tests lie within a range of ± 25 % in relation to the value of the braking force defined above.

NOTE Tests have shown that the coefficient of friction could be considerably reduced if several successive tests were carried out on the same area of a machined guide rail. This is attributed to a modification in the surface condition during successive safety gear operations.

It is accepted that, on an installation, an inadvertent operation of the safety gear would have every chance of occurring at an unused spot. It is necessary to consider that if, by chance, this were not the case, the braking force would have a lower value until an unused portion of guide rail surface was reached. Hence, greater sliding than normal.

This is a further reason for not permitting any adjustment causing a too small retardation at the beginning.

F.2.2.2.3.2 Safety gear certified for different masses

Adjustment in stages or continuous adjustment.

The braking force of which the safety gear is capable shall be calculated as laid down in F.2.2.2.3.1 for the maximum and minimum values applied for.

F.2.2.2.4 Checking after the tests

a) The hardness of the block and the gripping elements shall be compared with the original values submitted by the applicant. Other analyses may be made in special cases.

b) The deformations and modifications (for example, cracks, deformations or wear of the gripping elements, appearance of the rubbing surfaces) shall be checked.

c) If necessary, the safety gear assembly, the gripping elements and the guide rails shall be photographed in order to reveal deformations or fractures.

F.2.2.3 Calculation of the permissible mass

F.2.2.3.1 Safety gear certified for a single mass

The permissible mass shall be calculated using the following formula:

$$(P+Q)=\frac{F_{\mathrm{B}}}{16}$$

where

F_{B} is the braking force in newtons determined in accordance with F.2.2.2.3;

P is the masses of the empty car and components supported by the car, i.e. part of the travelling cable, compensating ropes/chains (if any), etc. in kilograms;

$(P+Q)$ is the permissible mass in kilograms;

Q is the rated load in kilograms.

F.2.2.3.2 Safety gear certified for different masses

F.2.2.3.2.1 Adjustment in stages

The permissible mass shall be calculated for each adjustment as laid down in F.2.2.3.1.

F.2.2.3.2.2 Continuous adjustment

The permissible mass shall be calculated as laid down in F.2.2.3.1 for the maximum and minimum values applied for and in accordance with the formula supplied for the intermediate adjustments.

F.2.2.4 Possible modification to the adjustments

If, during the tests, the values found differ by more than 20 % from those expected by the applicant, other tests may be made with his agreement, after modification of the adjustments if necessary.

NOTE If the braking force is clearly greater than that allowed for by the applicant, the mass used during the test would be clearly smaller than that which one would be led to authorize by calculation F.2.2.3.1 and consequently the test would not allow the conclusion that the safety gear is able to dissipate the required energy with the mass resulting from the calculation.

F.2.3 Comments

a) Mass stated by the installer:

When it is applied to a given lift, the mass stated by the installer shall not exceed the permissible mass for the safety gear (for instantaneous safety gear or instantaneous safety gear with buffered effect), and the adjustment considered;

In the case of progressive safety gear, the mass stated may differ from the permissible mass defined in F.2.2.3 by ± 7,5 %. It is accepted in these conditions that the requirements of 5.6.8.4 are met on the installation, notwithstanding the usual tolerances on the thickness of the guide rails, the surface conditions, etc.;

b) To evaluate the validity of welded parts, reference shall be made to standards on this subject;

c) A check shall be made that the possible travel of the gripping elements is sufficient under the most unfavourable conditions (accumulation of manufacturing tolerances);

d) The friction parts shall be suitably retained so that it can be certain that they will be in place at the moment of operation;

e) In the case of a progressive type safety gear, it shall be checked that the travel of the components forming the spring is sufficient.

F.2.4 Type examination certificate

F.2.4.1 The certificate shall be drawn up in triplicate, i.e. two copies for the applicant, and one for the laboratory.

F.2.4.2 The certificate shall indicate the following:

a) information according to F.0.2;

b) type and application of safety gear, and environmental conditions;

c) the limits of the permissible masses (see F.2.3 a)) and the corresponding braking forces;

d) the tripping speed of the overspeed governor;

e) the type of guide rail;

f) the permissible thickness of the guide rail blade;

g) the minimum width of the gripping areas;

and, for progressive safety gear or instantaneous safety gear with buffered effect:

h) the surface condition of the guide rails (drawn, milled, ground);

i) the state of lubrication of the guide rails. If they are lubricated, the category and specification of the lubricant;

j) the possible inclination or the maximum and minimum angles of inclination.

F.3 Overspeed governors

F.3.1 General provisions

The applicant shall indicate the following to the laboratory:

a) the type (or the types) of safety gear which will be operated by the governor;

b) the maximum and minimum rated speeds of lifts for which the governor may be used;

c) if necessary, the anticipated value of the tensile force produced in the rope by the overspeed governor when tripped.

Detailed and assembly drawings showing the construction, operation, materials used, the dimensions and tolerances on the construction components shall be attached to the application.

F.3.2 Check on the characteristics of the governor

F.3.2.1 Test samples

The following shall be submitted to the laboratory:

a) one overspeed governor;

b) all the components needed for its correct function e.g.:

   1) one rope of the type used for the overspeed governor and in the normal condition in which it should be installed. The length to be supplied is fixed by the laboratory;

   2) a tensioning pulley assembly of the type used for the overspeed governor;

   3) other devices: code sensors, rollers, etc.

F.3.2.2 Test for systems driven by a rope

F.3.2.2.1 Method of test

The following shall be checked:

a) the speed of tripping;

b) the operation of the electric safety device called for in 5.6.9.8.1 causing the machine to stop, if this device is mounted on the overspeed governor;

c) the operation of the electric safety device called for in 5.6.9.8.2 preventing all movement of the lift when the overspeed governor is tripped;

d) the tensile force produced in the rope by the overspeed governor when tripped.

F.3.2.2.2 Test procedure

At least 20 tests shall be made in the speed range for tripping corresponding to the range of rated speeds of the lift, indicated in F.3.1 b).

The tests may be made by the laboratory in the component manufacturers works.

The majority of tests should be made at the extreme values of the range.

The acceleration to reach the tripping speed of the overspeed governor should be as low as possible, in order to eliminate the effects of inertia.

F.3.2.2.3 Interpretation of the test results

F.3.2.2.3.1 In the course of 20 tests the tripping speeds shall lie within the limits called for in 5.6.9.1.1.

If the limits laid down are exceeded, an adjustment may be made by the manufacturer of the component and 20 new tests carried out.

F.3.2.2.3.2 In the course of the 20 tests the operation of the devices for which the test is required in F.3.2.2.1 b) and c) shall occur within the limits laid down in 5.6.9.8.1 and 5.6.9.8.2.

F.3.2.2.3.3 The tensile force in the rope produced by the overspeed governor when tripped shall be at least 300 N or any higher value which is specified by the applicant.

Unless otherwise requested by the manufacturer of the device and specified in the test report, the arc of engagement should be 180°.

In the case of a device, which operates by gripping the rope it should be checked that there is no permanent deformation of the rope.

F.3.2.3 Test for the other systems

F.3.2.3.1 Method of test

The following shall be checked:

a) the speed of tripping;

b) the operation of the electric safety device called for in 5.6.9.8.1 causing the machine to stop;

c) the operation of the electric safety device called for in 5.6.9.8.2 preventing all movement of the lift when the overspeed governor is tripped;

d) the trapping of the safety gear;

e) the electronical part of the system shall be verified according to Annex H.

F.3.2.3.2 Test procedure

At least 20 tests shall be made in the speed range for tripping corresponding to the range of rated speeds of the lift, indicated in F.3.1 b).

The tests may be made by the laboratory in the component manufacturers works.

The majority of tests should be made at the extreme values of the range.

The acceleration to reach the tripping speed of the overspeed governor should be as low as possible, in order to eliminate the effects of inertia.

F.3.2.3.3 Interpretation of the results of tests

F.3.2.3.3.1 In the course of 20 tests the tripping speeds shall lie within the limits called for in 5.6.9.1.1.

If the limits laid down are exceeded, an adjustment may be made by the manufacturer of the component and 20 new tests carried out.

F.3.2.3.3.2 In the course of the 20 tests the operation of the devices for which the test is required in F.3.2.2.1 b) and c) shall occur within the limits required in 5.6.9.8.1 and 5.6.9.8.2.

F.3.3 Type examination certificate

F.3.3.1 The certificate shall be drawn up in triplicate, i.e. two copies for the applicant, and one for the laboratory.

F.3.3.2 The certificate shall indicate the following:

a) information according to F.0.2;

b) type and application of overspeed governor;

c) the maximum and minimum rated speeds of the lift for which the overspeed governor may be used;

d) for systems driven by a rope:

   1) the diameter of the rope to be used and its construction;

   2) in case of an overspeed governor with traction pulley, the minimal force of tension;

   3) the tension force in the rope which can be produced by the overspeed governor when tripped.

e) for other systems:

   the limited values of the parameters which allow the tripping of the safety gear and to ensure the safe operation of the total system overspeed governor/safety gear (e.g. electrical tension, etc).

F.4 Buffers

F.4.1 General provisions

The applicant shall state the range of use provided, i.e. maximum impact speed, minimum and maximum masses. The following shall be attached to the application:

a) detailed and assembly drawings showing the construction, operation, materials used, the dimensions and tolerances on the construction components;

   In the case of hydraulic buffers, the graduation (openings for the passage of the liquid), in particular, shall be shown as a function of the stroke of the buffer;

b) specifications for the liquid used;

c) information regarding environmental conditions for use (temperature, humidity, pollution, etc.) and of life-cycle (aging, rejection criteria);

d) condition of use, inclination, number of cycles.

F.4.2 Samples to be submitted

The following shall be submitted to the laboratory:

a) one buffer;

b) in the case of hydraulic buffers, the necessary liquid sent separately.

F.4.3 Test

F.4.3.1 Energy accumulation type buffers with buffered return movement

F.4.3.1.1 Test procedure

F.4.3.1.1.1 The mass necessary to compress the spring completely shall be determined, for example, with the aid of weights loaded on to the buffer.

The buffer may only be used:

a) for rated speeds

$$v \leq \sqrt{\frac{F_L}{0{,}135}}$$ (see 5.7.4.1.1.1), but v ≤ 1,6 m/s (see 5.7.3.4)

where

F_L the total compression of the spring in metres;

b) for masses between:

maximum $\frac{C_r}{2{,}5}$

minimum $\frac{C_r}{4}$

where

C_r the mass needed to compress the spring completely in kilogrammes.

F.4.3.1.1.2 The buffer shall be tested with the aid of weights corresponding to the maximum and minimum masses falling in free fall from a height above the buffer equal to:

$$0{,}5\ F_L = 0{,}067\ v^2.$$

The speed shall be recorded from the moment of impact on the buffer and throughout the test.

At no time shall the rising speed of the weights (during return) exceed 1 m/s.

F.4.3.1.2 Equipment to be used

F.4.3.1.2.1 Weights falling in free fall

The weights shall correspond with the accuracies of F.0.1.6 to the minimum and maximum masses. They shall be guided vertically with the minimum of friction possible.

F.4.3.1.2.2 Recording equipment

The recording equipment shall be capable of detecting signals with the accuracies of F.0.1.6.

F.4.3.1.2.3 Measurement of speed

The speed shall be recorded with the accuracies of F.0.1.6.

F.4.3.1.3 Ambient temperature

The ambient temperature shall lie between + 15 °C and + 25 °C.

F.4.3.1.4 Mounting of the buffer

The buffer shall be placed in the vertical position and fixed in the same manner as for the normal service.

F.4.3.1.5 Checking of the condition of the buffer after tests

After two tests with the maximum mass, no part of the buffer shall show any permanent deformation or be damaged so that its condition shall guarantee normal operation.

F.4.3.2 Energy dissipation buffers

F.4.3.2.1 Test procedure

The buffer shall be tested with the aid of weights, corresponding to the minimum and maximum masses, falling in free fall to reach at the moment of impact the maximum speed called for.

The speed shall be recorded at least from the moment of impact of the weights. The acceleration and the retardation shall be determined as a function of time throughout the movement of the weights.

In addition, the method of tests for buffers in inclined position shall be defined between applicant and test laboratory, depending on the device and its function to achieve a realistic operation of the buffer.

NOTE This procedure relates to hydraulic buffers; for other types proceed by analogy.

F.4.3.2.2 Equipment to be used

The equipment shall satisfy to the following conditions:

F.4.3.2.2.1 Weights falling in free fall

The weights shall correspond to the accuracy of F.0.1.6, to the maximum and minimum masses. They shall be guided vertically with the minimum of friction possible.

F.4.3.2.2.2 Recording equipment

The recording equipment shall be able to detect signals with the accuracy of F.0.1.6. The measuring chain, including the recording device for the recording of measured values as a function of time, shall be designed with a system frequency of at least 1 000 Hz.

F.4.3.2.2.3 Measurement of speed

The speed shall be recorded at least from the moment of impact of the weights on the buffer or throughout the travel of the weights with the accuracy of F.0.1.6.

F.4.3.2.2.4 Measurement of the retardation

If there is a device for measuring retardation (see F.4.3.2.1), it shall be placed as near as possible to the axis of the buffer, and shall be capable of measurement with the accuracy of F.0.1.6.

F.4.3.2.2.5 Measurement of time

Time pulses of a duration of 0,01 s shall be recorded and measured with the accuracy of F.0.1.6.

F.4.3.2.3 Ambient temperature

The ambient temperature shall lie between + 15 °C and + 25 °C.

The temperature of the liquid shall be measured with the accuracies of F.0.1.6.

F.4.3.2.4 Mounting of the buffer

The buffer shall be placed and fixed in the same manner as in normal service.

F.4.3.2.5 Filling of the buffer

The buffer shall be filled up to the mark indicated following the instructions of the component manufacturer.

F.4.3.2.6 Checks

F.4.3.2.6.1 Checking of retardation

The height of free fall of the weights shall be chosen in such a way that the speed at the moment of impact corresponds to the maximum impact speed stipulated in the application.

The retardation shall conform to the requirements of 5.7.4.3.3 of this standard.

A first test shall be made with maximum mass with a check on the retardation.

A second test shall be made with minimum mass with a check on the retardation.

The manufacturer shall produce evidence by calculation that the value of a_h remains in conformity with 5.7.4.1.2.1.

F.4.3.2.6.2 Checking of the return of the buffer to the normal position

After each test the buffer shall be held in the completely compressed position for 5 min. The buffer shall then be freed to permit its return to its normal extended position.

When the buffer is of a type with spring or gravity return, the position of complete return shall be reached in a maximum period of 120 s.

Before proceeding to another retardation test there shall be a delay of 30 min to permit the liquid to return to the tank and for bubbles of air to escape.

F.4.3.2.6.3 Checking of the liquid losses

The level of liquid shall be checked after having made the two retardation tests required in F.4.3.2.6.1, and after an interval of 30 min the level of liquid shall again be sufficient to ensure normal operation of the buffer.

F.4.3.2.6.4 Checking of the condition of the buffer after tests

After the two retardation tests required in F.4.3.2.6.1 no part of the buffer shall show any permanent deformation or be damaged so that its condition shall guarantee normal operation.

F.4.3.2.7 Procedure in the case of tests failing the requirements

When the test results are not satisfactory with the minimum and maximum masses appearing in the application, the laboratory may, in agreement with the applicant, establish the acceptable limits.

F.4.3.3 Buffers with non-linear characteristics

F.4.3.3.1 Test procedure

F.4.3.3.1.1 The buffer shall be tested with the aid of masses falling in free fall from a height to reach at the moment of impact the maximum speed called for, but not less than 0,8 m/s.

The falling distance, the speed, the acceleration and retardation shall be recorded from the moment of release of the weight to the complete standstill.

F.4.3.3.1.2 The masses shall correspond to the maximum and minimum masses called for. They shall be guided vertically with a minimum of friction possible, so that at the moment of impact at least 0,9 g_n are reached.

F.4.3.3.2 Equipment to be used

The equipment shall correspond to F.4.3.2.2.2, F.4.3.2.2.3 and F.4.3.2.2.4.

F.4.3.3.3 Ambient temperature

The ambient temperature shall lie between + 15 °C and + 25 °C.

F.4.3.3.4 Mounting of the buffer

The buffer shall be placed vertically and fixed in the same manner as for the normal service.

F.4.3.3.5 Number of tests

Three tests shall be made with:

a) the maximum mass;

b) the minimum mass called for.

The time delay between two consecutive tests shall lie between 5 min and 30 min.

With the three tests with maximum mass the value of reference of the buffer force at a stroke equal to 50 % of the real height of the buffer given by the applicant shall not vary by more than 5 %. With the tests with minimum mass this shall be observed in analogy.

F.4.3.3.6 Checks

F.4.3.3.6.1 Checking of retardation

The retardation "a" shall conform to the following requirements:

a) the average retardation in case of free fall with rated load in the car from a speed equal to 115 % of the rated speed shall not exceed 1 g_n. The average retardation will be evaluated taking into account the time between the first two absolute minima of the retardation (see Figure F.1);

b) peaks of retardation with more than 2,5 g_n shall not be longer than 0,04 s.

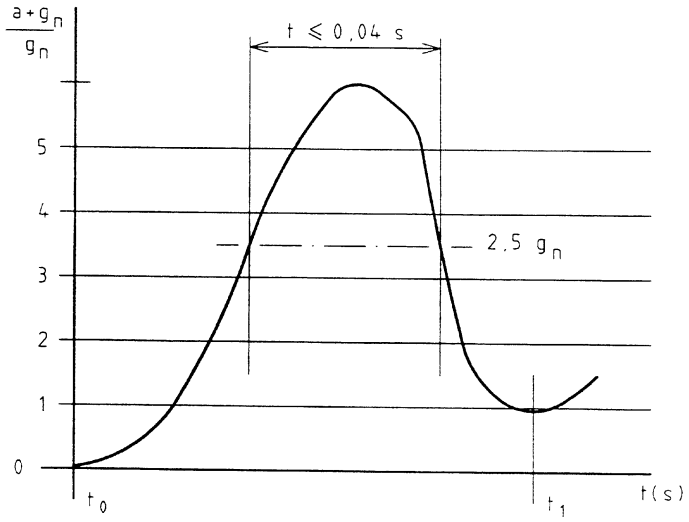

Key

0 moment of hitting the buffer (first absolute minimum)

1 second absolute minimum

Figure F.1 — Retardation graph

The manufacturer shall produce evidence by calculation that the value of ah remains in conformity with 5.7.4.1.2.1.

F.4.3.3.6.2 Checking of the condition of the buffer after tests

After the tests with the maximum mass no part of the buffer shall show any permanent deformation or be damaged so that its condition shall guarantee normal operation.

F.4.3.3.7 Procedure in the case of tests failing the requirements

When the test results are not satisfactory with the minimum and maximum masses appearing in the application, the laboratory may, in agreement with the applicant, establish the acceptable limits.

F.4.4 Type examination certificate

F.4.4.1 The certificate shall be drawn up in triplicate, i.e. two copies for the applicant, and one for the laboratory.

F.4.4.2 The certificate shall indicate the following:

a) information according to F.0.2;

b) type and application of buffer;

c) the maximum permissible inclination relative to the vertical;

d) the maximum impact speed;

e) the maximum mass;

f) the minimum mass;

g) the average retardation;

h) the specification of the liquid in the case of hydraulic buffers;

i) environmental conditions for use (temperature, humidity, pollution, etc.) in case of buffers with nonlinear characteristics.

F.4.5 Buffers subjected to be stressed at the end of the travel

Buffers subjected to be stressed at the end of the travel shall be tested with a minimum number of cycles of 1 000 (in normal conditions of use to be specified by the manufacturer).

F.5 Safety circuits containing electronic components and/or programmable electronic systems (PESSRAL)

F.5.1 General

For safety circuits containing electronic components, laboratory tests are necessary because practical checks on site, by inspectors, are impossible.

In the following, mention is made to printed circuit board. If a safety circuit is not assembled in such a manner, then the equivalent assembly shall be assumed.

F.5.2 General provisions

F.5.2.1 Safety circuits containing electronic components

The applicant shall indicate to the laboratory:

a) the identification on the board;

b) working conditions;

c) listing of used components;

d) layout of the printed circuit board;

e) layout of the hybrids and marks of the tracks used in safety circuits;

f) function description;

g) electrical data inclusive wiring diagram, if applicable, including input and output definitions of the board.

F.5.2.2 Safety circuits based on programmable electronic systems

In addition to F.5.2.1 the following documentation shall be provided:

a) documents and descriptions relating to the measures listed in Table 12;

b) general description of the software used (e.g. programming rules, language, compiler, modules);

c) function description including software architecture and hardware/software interaction;

d) description of blocks, modules, data, variables and interfaces;

e) software listings.

F.5.3 Test samples

There shall be submitted to the laboratory:

a) one printed circuit board;

b) one printed circuit board bare (without components).

F.5.4 Mechanical tests

F.5.4.1 General

During the tests, the tested object (printed circuit) shall be kept under operation. During and after the tests, no unsafe operation and condition shall appear within the safety circuit.

F.5.4.2 Vibrations

Transmitter elements of safety circuits shall withstand the requirements of:

a) EN 60068-2-6:2008, Endurance by sweeping, Table C.2:

   20 sweep cycles in each axis, at amplitude 0,35 mm or 5 g_n, and in the frequency range from 10 to 55 Hz;

and also to:

b) EN 60068-2-27:2009, Acceleration and duration of pulse, Table 1:

   the combination of:

   1) peak acceleration 294 m/s^2 or 30 g_n;

   2) corresponding duration of pulse 11 ms; and

   3) corresponding velocity change 2,1 m/s half sine.

NOTE Where shock absorbers for transmitter elements are fitted, they are considered as part of the transmitter elements.

After tests, clearances and creepage distances shall not become smaller than the minimum accepted.

F.5.4.3 Bumping

F.5.4.3.1 General

F.5.4.3.1.1 Bumping tests are to simulate the cases when printed circuits fall, introducing the risk of rupture of components and unsafe situation. These tests shall be carried out according to EN 60068-2-27:2009.

F.5.4.3.1.2 Tests are divided into the partial test shocking, and continuous shocking. During the tests, the operation of the circuit is not required.

F.5.4.3.2 Partial test shocking

The test object shall satisfy the following minimum requirements:

a) shocking shapes 1 pulse in each axis (half-sinus);

b) amplitude of acceleration 15 g_n;

c) duration of shock 11 ms.

F.5.4.3.3 Continuous shocking

The test object shall satisfy the following minimum requirements:

a) amplitude of acceleration 10 g_n;

b) duration of shock 16 ms;

c) number of shocks 1 000 ± 10;

d) shock frequency 2/s.

F.5.5 Climatic stress testing

F.5.5.1 Temperature tests

Temperature tests shall be carried out according to EN 60068-2-14:2009 as follows:

a) Operating ambient limits: 0 °C, + 65 °C (ambient temperature of the electric safety device in the control panel);

b) Test conditions:

   1) the printed circuit board shall be in operational position.

   2) the printed circuit board shall be supplied with normally rated voltage.

   3) the electric safety device shall operate during and after the test. If the printed circuit board includes components other than safety circuits, they also shall operate during the test (their failure is not considered).

   4) Tests will be carried out for minimum and maximum temperature (0 °C, + 65 °C); tests will last a minimum of 4 h.

   5) If the printed circuit board is to be used to operate within wider temperature limits, it shall be tested for these values.

F.5.5.2 Humidity tests

Humidity tests are not necessary for safety circuits as the pollution degree for lifts is supposed to be class 3 according to EN 60664-1:2007, and the relative creeping distances and clearances are specified in this standard.

F.5.6 Functional and safety test of PESSRAL

In addition to the verification of the measures defined in Tables 8 to 13, the following shall be validated:

a) software design and coding: inspect all code statements using methods such as formal design reviews, FAGAN, test cases, etc.;

b) software and hardware inspection: verify all measures of Tables 8 and 9 and the measures chosen e.g. from Table I.1 by using for example fault insertion testing (based on EN 61508-2:2010 and EN 61508-7:2010).

F.5.7 Type examination certificate

F.5.7.1 The certificate shall be drawn up in triplicate, i.e. two copies for the applicant and one copy for the laboratory.

F.5.7.2 The certificate shall indicate:

a) information according to F.0.2;

b) type and application in the circuitry;

c) design for pollution degree according to EN 60664-1:2007;

d) operating voltages;

e) distances between the safety circuits and the rest of the control circuits on the board;

f) the environmental conditions.

F.6 Ascending vehicle overspeed protection means

F.6.1 General provisions

This specification applies to ascending vehicle overspeed protection means which are not using safety gears, overspeed governors, or other devices which are subject to verifications according to F.2, F.3 and F.5

The applicant shall state the range of use provided:

a) minimum, maximum masses and braking forces;

b) maximum rated speed;

c) use in installations with compensating ropes.

d) the inclination of the lift;

e) the environmental conditions (especially for the range of temperature) …

The following documents are to be attached to the applications:

f) detailed and assembly drawings showing the construction, operation, materials used, the dimensions and tolerances on the construction components;

g) if necessary, also a load diagram relating to elastic parts;

h) detailed information on the materials used, the type of part on which the ascending vehicle overspeed protection means acts, and its surface condition (drawn, milled, ground, etc.).

F.6.2 Statement and test sample

F.6.2.1 The applicant shall state for what mass, tripping speed (in meters per second) and the range of inclination the test is to be carried out. If the device has to be certified for various values of these measures, the applicant shall specify them and indicate in addition whether adjustment is by stages or continuous.

F.6.2.2 As defined between applicant and the laboratory:

a) either a complete assembly consisting of both elements, braking device and speed monitoring device, or

b) only that device which was not subject to verifications according to F.2, F.3 or F.5,

shall be placed at the disposal of the laboratory.

The number of sets of gripping elements necessary for all the tests shall be attached. The type of part on which the device acts, shall also be supplied with the dimensions specified by the laboratory.

F.6.3 Test

F.6.3.1 Method of test

The method of test shall be defined between applicant and test laboratory, depending on the device and its functioning to achieve a realistic function of the system. Measurements shall be made of:

a) the acceleration and speed;

b) the braking distance;

c) the retardation.

Measurements shall be recorded as a function of the time.

F.6.3.2 Test procedure

F.6.3.2.1 General provision

At least 20 tests shall be made with the speed monitoring element in the speed range for tripping corresponding to the range of rated speeds of the lift indicated in F.6.1 b).

The acceleration of the mass to reach the tripping speed should be as low as possible, in order to eliminate the effects of inertia.

F.6.3.2.2 Device certified for a single mass

The laboratory shall carry out four tests with the system mass representing an empty car.

Between each test the friction parts shall be allowed to return to their normal temperature.

During the tests several identical sets of friction parts may be used.

The test shall be made at the maximum tripping speed for which the device may be used.

F.6.3.2.3 Device certified for different masses

Adjustment in stages or continuous adjustment.

A series of tests shall be carried out for the maximum value applied for and a series for the minimum value. The applicant shall supply a formula, or a chart, showing the variation of the braking force as a function of a given parameter.

The laboratory shall verify by suitable means (in the absence of anything better, by a third series of tests for intermediary points) the validity of the supplied formula.

With a single inclination, the braking force shall be determined as a function of the mass and the inclination. For the change of the inclination, it shall be checked by calculation that in the most unfavourable case (the smallest inclination) the braking force does not cause a too high retardation (horizontal component), this is also true for the counterweight.

F.6.3.2.4 Overspeed monitoring device

F.6.3.2.4.1 Test procedure

At least 20 tests shall be made in the speed range for tripping without applying the braking device.

The majority of tests shall be made at the extreme values of the range.

F.6.3.2.4.2 Interpretation of the test results

In the course of 20 tests the tripping speeds shall lie within the limits called for in 5.6.10.2.

F.6.3.3 Checking after the tests

After the test:

a) the hardness of the gripping element shall be compared with the original values quoted by the applicant. Other analyses may be carried out in special cases;

b) if there is no fracture, deformations and other changes shall be examined (for example, cracks, deformations or wear of the gripping elements, appearance of the rubbing surfaces);

c) if necessary, photographs shall be taken of the gripping elements and the parts on which the device acts for evidence of deformations or fractures;

d) it shall be checked that the retardation in the most unfavourable case with the minimum mass shall be such that:

   1) the horizontal component is less than 0,5 g and

   2) the vertical component remains less than 1,0 g.

F.6.4 Possible modification to the adjustments

If, during the tests, the values found differ by more than 20 % from those expected by the applicant, other tests may be made with his agreement, after modification of the adjustments if necessary.

F.6.5 Test report

In order to achieve reproducibility the type examination shall be recorded in all details, such as:

a) the method of test defined between applicant and laboratory;

b) the description of the testing arrangement;

c) location of the device to be tested in the testing arrangement;

d) number of tests carried out;

e) record of measured values;

f) report of observations during the test;

g) evaluation of the test results to show compliance with the requirements.

F.6.6 Type examination certificate

F.6.6.1 The certificate shall be drawn up in triplicate, i.e. two copies for the applicant and one copy for the laboratory.

F.6.6.2 The certificate shall indicate:

a) information according to F.0.2;

b) type and application of overspeed protection means;

c) the limits of the permissible masses and the corresponding braking forces;

d) the tripping speed range of the overspeed monitoring device;

e) the type of parts on which the braking elements act;

f) the possible limits of the range of inclination.

F.7 Unintended vehicle movement protection means

F.7.1 General provisions

F.7.1.1 Key parameters

The applicant shall state the key parameters for use of the system that shall consist of an unintended vehicle movement detector, control circuits and stopping element(s) that shall form part of the type examination:

a) minimum and maximum masses;

b) minimum and maximum force or torque, if applicable;

c) individual response times of detector, control circuit and stopping element(s);

d) highest speed anticipated before deceleration occurs (see Note 1);

e) distance from the floor at which the detector device will be installed;

f) test speed(s) (see NOTE 2);

g) the range of inclination;

h) limits of temperature and humidity of the design and any other relevant information agreed between the designer and test laboratory.

NOTE 1 The maximum speed attainable would normally be in the magnitude of 2 m/s. This is based on the speed attained at start of deceleration e.g. being the result of a “natural” acceleration of 1,5 m/s^2 through the response times of the Unintended vehicle movement protection device, control circuit and stopping elements.

NOTE 2 Test speed(s): a speed stated by the manufacturer, used by the test laboratory to establish a distance moved by the lift (verification distance) so that the unintended movement system is verified for correct operation during final inspection at site. This could be the inspection speed or any other speed determined by the manufacturer and agreed by the laboratory.

Distance the vehicle is permitted to move during unintended movement as defined in 5.6.11.5 is shown in Figure F.2.

F.7.1.2 Documents

The following documents are to be attached to the applications:

a) detailed and assembly drawings showing the construction, operation, the dimensions and tolerances of the components;

b) if necessary, also a load diagram relating to elastic parts;

c) detailed information of the materials used, the type of part on which the means acts, and its surface condition, if relevant (drawn, milled, ground, etc.).

F.7.2 Statement and test sample

F.7.2.1 The applicant shall state for what duty the means is intended

F.7.2.2 Test sample as agreed between applicant and the laboratory:

a) As appropriate, a complete assembly consisting of, unintended vehicle movement detection device, control circuit (actuator), stopping elements and any monitoring device(s) if applicable.

b) The number of sets of gripping elements necessary for all the tests shall be attached.

c) The type of part on which the device acts, shall also be supplied with the dimensions specified by the laboratory.

F.7.3 Test

F.7.3.1 Method of Test

The method of test shall be defined between applicant and test laboratory, depending on the device and its function to achieve a realistic operation of the system.

Measurements shall be made of:

a) the stopping distance;

b) the average retardation;

c) the response time of the control circuits (see Figure F.2, item 1);

d) the response time of the braking element (see Figure F.2, item 2);

e) the total distance travelled (sum of acceleration and stopping distances).

Test shall also include:

f) operation of the unintended vehicle movement detection device and

g) any automatic monitoring system, if applicable.

F.7.3.2 Test procedure

F.7.3.2.1 General provision

20 tests shall be made on the stopping element with:

a) no result outside the specification,

b) each result within ± 20 % of the average value.

The average value shall be stated on the certificate.

F.7.3.2.2 Device certified for a single mass or torque

The laboratory shall carry out 10 tests with the system mass or torque representing an empty car in up direction and 10 tests with the system mass or torque representing a vehicle carrying the rated load in down direction.

Between each test the friction parts shall be allowed to return to their normal temperature.

During the tests several identical sets of friction parts may be used. However, one set of parts shall be capable of 5 tests minimum.

F.7.3.2.3 Device certified for different masses or torques

A series of tests shall be carried out for the maximum value applied for and a series for the minimum value. The applicant shall supply a formula or a chart, showing the calculated variation of the braking force or torque as a function of a given adjustment. The results being expressed in distance travelled.

The laboratory shall verify the validity of the formula or chart.

F.7.3.2.4 Unintended movement detection means

10 tests shall be made to verify the operation of the device.

F.7.3.2.5 Redundancy monitoring

10 tests shall be made to verify the operation of the device.

F.7.3.3 Checks after the test

After the test:

a) the mechanical characteristics of the stopping element(s) shall be compared with the original values quoted by the applicant. Other analyses may be carried out in special cases;

b) if there is no fracture or deformations and any other changes shall be examined (for example, cracks, deformations or wear of the gripping elements, appearance of the rubbing surfaces);

c) if necessary, photographs shall be taken of the gripping elements and the parts on which the device acts for evidence of deformations or fractures.

F.7.4 Possible modification to the adjustments

If, during the tests, the values found differ by more than 20 % from those expected by the applicant, another series of tests may be made with his agreement, after modification of the adjustments if necessary.

F.7.5 Test report

In order to achieve reproducibility, the type examination shall be recorded in all details, such as:

a) the method of test defined between applicant and laboratory;

b) the description of the testing arrangement;

c) location of the device to be used when installed in the testing arrangement;

d) number of tests carried out;

e) record of all measured values;

f) report of observations during the test;

g) evaluation of the test results to show compliance with the requirements.

F.7.6 Type examination certificate

F.7.6.1 The certificate shall be drawn up in triplicate, i.e. two copies for the applicant and one copy for the laboratory.

F.7.6.2 The certificate shall indicate:

a) information according to F.0.2

b) type and application of the unintended vehicle movement protection system;

c) the limits of the key parameters (as agreed between laboratory and manufacturer);

d) the test-speed with relevant parameters for Final Inspection use;

e) the type of parts on which the stopping elements act;

f) the combination of “detecting” device and “stopping” element of the means;

g) the possible limits of the range of inclination.

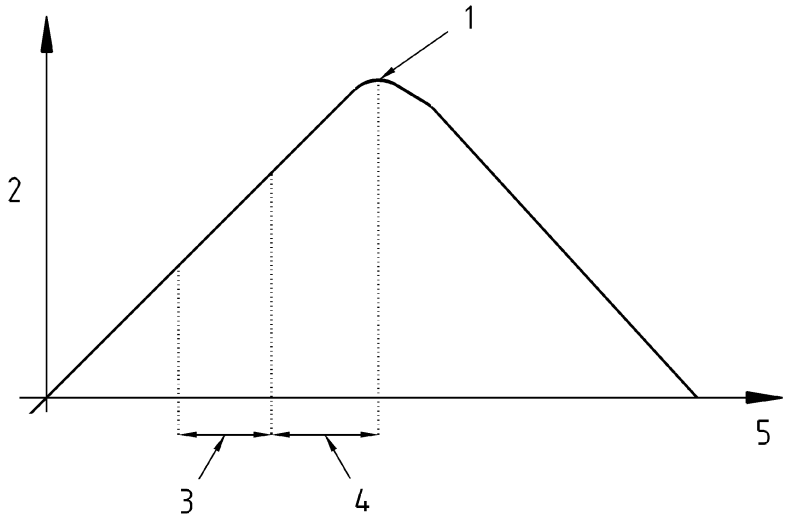

Key

1 point at which braking elements start to cause a reduction in speed

2 speed

3 response time of Uncontrolled Vehicle Movement Detection and any control circuits

4 response time of braking elements

5 time

Unintended vehicle movement zone should be of 1,20 m maximum.

Figure F.2 — Response time

Annex G
(informative)

Calculation of the supporting structure, the running tracks, the guide rails, the vehicle and the safety gear gripping element

G.1 General

The following information allows the determination of the actions to be taken into consideration in order to identify the forces supported by the frameworks and the buildings, including the dimensioning of the running tracks, the vehicle and the guide rails of the lifts.

G.2 determines the principal actions to be taken into account for calculation.

G.3 describes a practical method for proof of the guide rails of the lift; it is taken from EN 81-1:1998+A3:2009 dedicated to vertical lifts.

NOTE EN 13107 [6] can also be used as a guidance for the realization of the necessary civil engineering works.

G.2 Actions to take into account for calculation

G.2.1 General

G.2.1.1 Principal classifications of actions

G.2.1.1.1 An action is:

a) a direct action, e.g. a force or load applied to the structure and the vehicle, or

b) an indirect action, e.g. an imposed or constrained deformation (caused by e.g. temperature changes, moisture variation, uneven settlement), or an imposed acceleration (caused e.g. by an earthquake).

G.2.1.1.2 Actions are classified:

a) by their variation in time:

   1) permanent actions, e.g. deadweight of the structures, vehicle, auxiliary immovable fittings, ancillary and fixed equipment;

   2) variable actions, e.g. imposed loads, actions induced by the ropes, traffic loads, wind actions or snow loads;

   3) accidental actions, e.g. impact on the buffers, the safety gear;

b) by their spatial variation:

   1) fixed actions, e.g. dead weight;

   2) free actions, e.g. moving loads, wind actions, snow loads.

c) by their nature and/or the structural response:

   1) static actions, which do not cause significant acceleration of the structure or structural element;

2) dynamic actions, which cause significant acceleration of the structure or the structural element.

G.2.2 Action relating to lifts with inclined travel path

G.2.2.1 Permanent actions

G.2.2.1.1 Dead-weights of the vehicle, structure and of the structural elements

The dead-weights of the vehicle, structure and of the structural elements shall be considered.

The dead-weight of the vehicle is relative to the make-up of its final construction (including any additional equipment such as controls, rescue equipment, internal equipment etc.) and shall include all additional loads.

G.2.2.1.2 Ground actions

As a general rule the characteristic values of ground actions should be taken in accordance with EN 1997-1 [7].

G.2.2.2 Variable actions

G.2.2.2.1 Actions induced by ropes.

The characteristic values of the action induced by ropes should be taken in accordance with EN 12930 [8].

G.2.2.2.2 Actions induced by the vehicle, the counterweight/balancing weight.

G.2.2.2.3 Dynamic effects.

Dynamic effects result from irregularities of the running track or the carriage. They are in generally defined by the characteristic value of the load of the wheels of the vehicle, which should be multiplied by the dynamic coefficient Φ equal to 1,3.

G.2.2.2.4 Lateral force.

The lateral force is induced by the lateral oscillations of the vehicle on line. This force applying on the guiding elements is estimated as 10 % of the vertical load to be guided.

G.2.2.2.5 Imposed loads.

The characteristic values of imposed loads on workingstations should be taken as follows:

a) 2,0 kN/m^2 as an uniformly distributed load, or, where relevant;

b) 2,0 kN as a concentrated load in the most unfavourable position;

c) 0,5 kN/m as a horizontal line load acting transversally on the balustrade.

G.2.2.2.6 Wind actions.

They include wind actions in and out of operation, which should be applied to the loaded or empty vehicle, the structures supporting the travel path and their equipment.

In the main determined cases of load, the horizontal wind forces apply on the vehicles and are perpendicular to the axis of the track and to the centre of gravity of the lateral surface of the vehicles.

According to the EN 1991-1 series [9], the characteristic value of the global wind force F_w can be obtained from:

$$F_w = q_{ref} \cdot c_e(z_e) \cdot c_f \cdot c_d \cdot A_{ref} \quad \text{(G.1)}$$

where

A_{ref} is the reference area for c_f

c_d is the dynamic coefficient

$c_e(z_e)$ is the exposure coefficient

c_f is the force coefficient

q_{ref} is the reference mean wind velocity pressure

The characteristic value of the wind action in operation can be taken from Formula (G.1); the minimum value of the wind pressure w_{min} should be taken as a constant:

$$w_{min} = q_{ref} \cdot c_e(z_e) \cdot c_d = 0{,}40 \text{ kN/m}^2. \quad \text{(G.2)}$$

The characteristic value of wind action out of operation should be taken in accordance with EN 1991-1-4 [10]; the minimum value of the wind pressure w_{min} should be taken as a constant:

w_{min} = 1,2 kN/m^2

G.2.2.2.7 Snow loading.

The characteristic value of snow loads should be taken in accordance with the EN 1991-1 series [9].

G.2.2.2.8 Ice loading.

The characteristic value or the calculation value respectively of ice loading, applied to the structures supporting the travel path and the external equipment of stations, should be specified by the client and the designer in co-ordination with competent person.

G.2.2.2.9 Forces induced by the drive and the brakes.

The minimum and maximum values of the retardation of the vehicle are given in 5.9.4 and 5.9.13.

G.2.2.3 Accidental actions

G.2.2.3.1 Actions against the buffers after a slowdown failure

The minimum and maximum values of the retardation of the vehicle are given in 5.9.13.

G.2.2.3.2 Braking forces

They include forces which are induced by the shock of a safety gear operation or of the operation of the electro-mechanical brake.

The maximum values for the retardation of the vehicle are given in 5.6.8.4.

G.2.2.3.3 Action against buffers

During normal operation action against buffers are induced by the impact of the carriage against the buffers.

The maximum values for the retardation of the vehicle are given in 5.7.4.1 and 5.7.4.3.

G.2.2.3.4 Seismic actions

The design values of seismic actions as well as the measures to be adopted should be taken in accordance with EN 1998-1 [11] and EN 81-77:2013 [12].

G.2.2.3.5 Fire

The possibility of the occurrence of fire should be examined (see EN 12929-1 [13]). Where actions on structures exposed to fire have to be taken into account the design of the structures should meet the requirements of the EN 1991-1 series [9].

G.2.2.3.6 Other actions and effects

— Thermal actions due to the variations of temperature;

— material dependent effects such as shrinkage, creep, relaxation;

— the effect of displacements of supports;

— actions which occurs during installation;

— actions which occurs during maintenance.

G.3 Proof of guide rails

The guide rails for the lift with inclined travel path ensure one or the total of the following functions (5.7.2):

— supporting of the vehicle (counterweight or balancing weight);

— guiding of the vehicle (counterweight or balancing weight);

— providing a surface on which the safety gear can grip.

For guides with T section used in vertical lift and ensuring the guidance function and/or the support of the safety gear one method of calculation is given in EN 81-1:1998+A3:2009. This method should be applied considering the inclination of the travel path.

Annex H
(normative)

Electronic components- Failure exclusion

H.1 Scope

The faults to be considered in the electric equipment of a lift are listed in 5.11.1.1.1. In 5.11.1.1 it is stated that certain faults can be excluded under specified conditions.

This annex describes these conditions and gives the requirements for fulfilling them.

H.2 Failure exclusions - conditions

Table H.1 shows:

a) a list of the major and most usual components used in present electronic technology; the components have been grouped by “families”:

   1) passive components

   2) semiconductors

   3) miscellaneous

   4) assembled printed circuits

b) a number of identified failures:

   1) interruption I
   2) short-circuit II
   3) change value to higher value III
   4) change value to lower value IV
   5) change of function V

c) the possibility and conditions of failure exclusion:

   “The first condition for failure exclusion is that components shall always be used within their own worst case limits, even in the worst case conditions specified by the standards, in the field of temperature, humidity, voltage and vibrations”.

d) some remarks.

   In the table:

   1) the “NO” in the cell means: failure not excluded, i.e. shall be considered;

   2) the unmarked cell means: the identified fault type is not relevant.

   NOTE A design guide line for safety circuits is given in I.2

Table H.1 — Exclusions of failures

Component	Possible failure exclusion					Conditions for the exclusion of faults Remarks
	I	II	III	IV	V	
1 Passive components						
1.1 Resistor fixed	No	(1)	No	(1)		(1) Only for film resistors with varnished or sealed resistance film and axial connection according to applicable IEC standards, and for wire wound resistors if they are made by a single layer winding protected by enamel or sealed.
1.2 Resistor variable	No	No	No	No		
1.3 Resistor, non linear 1.3.1 NTC 1.3.2 PTC 1.3.3 VDR 1.3.4 IDR	No No No No	No No No No	No No No No	No No No No		
1.4 Capacitor	No	No	-	No		
1.5 Inductive components - coil - choke	No	No		No		
2 Semiconductors						
2.1 Diode, LED	No	No			No	Change of function refers to change in reverse current value.
2.2 Zener Diode	No	No		No	No	Change to lower value refers to change in Zener voltage. Change of function refers to change in reverse current value.
2.3 Thyristor, Triac, GTO	No	No			No	Change of function refers to self-triggering or latching of components.

2.4 Optocoupler	No	(2)			No	'I' means open circuit in one of the two basic components (LED and photo transistor); 'II' means short circuit between them. (2) Can be excluded under condition that the optocoupler is according to EN 60747–5-5, and the isolation voltage is at least according to table below (taken from EN 60664–1:2007, Table F.1). Voltage phase-to-earth derived from rated system voltage up to and including V_{rms} and d.c. / Preferred series of impulse withstand voltages in volts for installation (category III) 50 / 800 100 / 1 500 150 / 2 500 300 / 4 000 600 / 6 000 1 000 / 8 000
2.5 Hybrid circuits	No	No	No	No	No	
2.6 Integrated circuits	No	No	No	No	No	Change in function to oscillation; 'and' gates becoming 'or' gates, etc.
3 Various						
3.1 Connectors Terminals Plugs	No	(3)				(3) If the protection of the connector is not better than IP 4X, the short circuits of connectors can be excluded if the minimum values are at least: - 4 mm for creepage distances; - 3 mm for clearances. These are absolute minimum values which can be found on the connected unit, not pitch dimension or theoretical values. If the protection of the connector is better than IP4X (in accordance with EN 60529:1991), the creepage distances can be reduced to the clearance values given by EN 60664–1:2007 with the conditions of: - pollution degree of 3; - material group III and - presence of an inhomogeneous field.
3.2 Neon bulb	No	No				
3.3 Transformer	No	(4)	(5)	(5)		(4) Short-circuits include short-circuits of primary or secondary windings, or between primary and secondary coils. (5) Change in value refers to change of ratio by partial short-circuit in a winding. (4) and (5) Can be excluded under condition that isolation resistance and voltage are in line with EN 61558–1:2005, 18.2 and 18.3.

3.4 Fuse		(6)				'II' means short circuit of the blown fuse. (6) Can be excluded if the fuse is correctly rated, and constructed according to EN 60269–1:2007.
3.5 Relay	No	(7) (8)				(7) Short-circuits between contacts, and between contacts and coil can be excluded if the relay fulfils the requirements of 5.10.2.2.3 (5.11.1.2.2.4). (8) Welding of contacts cannot be excluded. However, if the relay is constructed to have mechanically forced interlocked contacts, and made according to EN 60947–5-1:2004, the assumptions of 5.10.2.1.3 apply.
3.6 Printed circuit board (PCB)	No	(9)				The general specifications of the PCB are in accordance with EN 62326–1:2002. The base material shall be according to the specifications of the EN 61249–2 series. (9) If the PCB is constructed to the above requirements and the protection is not better than IP4X, the short circuits can be excluded if the minimum values are at least: - 4 mm for creepage distances; - 3 mm for clearances. These are absolute minimum values which can be found on the connected unit, not pitch dimension or theoretical values. If the protection of the connector is better than IP4X (in accordance with EN 60529:1991), the creepage distances can be reduced to the clearance values given by EN 60664–1:2007 with the conditions of: - pollution degree of 3; - material group III; - and presence of an inhomogeneous field.
4 Assembly of components on printed circuit board	No	(10)				(10) Short circuit can be excluded under circumstances where the component itself can be excluded and is mounted in a way that the creeping distances and clearances are not reduced below the minimum acceptable values as listed in 3.1 and 3.6 of this table, not by the mounting technique, nor by the PCB itself.

Key

I interruption
II short-circuit
III change value to higher value
IV change value to lower value
V change of function

Annex I
(informative)

Safety circuits

I.1 Design guide-line for safety circuits

This design guide-line gives recommendations to avoid dangerous situations in the case when information is collected from the safety circuit for control purposes, for remote control, alarm control, etc.

Some dangerous situations are recognized coming from the possibility of bridging one or several electric safety devices by short circuiting or by local interruption of common lead (earth) combined with one or several other failures. It is good practice to follow the recommendations given below:

1) Design the board and circuits with distances in accordance with Specifications 3.1 and 3.6 of Table H.1.

2) Organize common lead so that the common lead for the control of the inclined lift comes behind the electronic components. Any rupture will cause a non-operation of the control (danger exists that changes in wiring occur during the life of the inclined lift).

3) Make always calculations about the “worst case” condition.

4) Always use outside (out of element) resistors as protective devices of input elements; internal resistor of the device should not be considered as safe.

5) Use only components according to listed specifications.

6) Consider backwards voltage coming from electronics. Using galvanically separated circuits can solve the problems in some cases.

7) Design electric installations in accordance with HD 60364-5-54 [14].

8) The “worst case” calculation cannot be avoided, whatever the design. If modifications or add-ons are made after the installation of the inclined lift, the “worst case” calculation, involving new and existing equipment, shall be carried out again

9) Some failure exclusions can be accepted, according to Table H.1.

10) Failures outside the environment of the inclined lift need not be taken into consideration.

“An interruption of the earth from the main supply of the building to the controller collection earth bar (rail) can be excluded, providing the installation is made in accordance with HD 60364-5-54 [14].”

I.2 Description of possible measures

The following table contains descriptions of possible measures which are considered to be helpful when fulfilling the requirements of 5.11.1.3.3:

Table I.1 — Description of possible measures to failure control

Components and functions	Measure No.	Description of measures
Structure	**M 1.1**	**One channel structure with self-test** Description: Even though the structure consists of a single channel, redundant output paths shall be provided to ensure a safe shutdown. Self-tests (cyclical) are applied to the sub-units of the PESSRAL at time intervals which may be application dependent. These tests (e.g. CPU tests or memory tests) are designed to detect latent failures which are independent of the data flow. A detected failure shall cause the system to go into a safe state.
	M.1.2	**One channel structure with self-test and monitoring** Description: A one channel structure with self-test and monitoring consists of a separate hardware monitoring unit which, independent of the application, periodically receives test data from the system which might result from self-test procedures. In case of incorrect data, the system shall go into a safe state. At least two independent shut down paths are needed so that a shut down can be caused either by the processing unit itself or by the monitoring unit.
	M.1.3	**Two channels or more with comparison** Description: Two-channel safety-related design consists of two independent and feedback-free functional units. This allows the specified functions to be processed independently in each channel. For a two-channel PESSRAL exclusively designed for the function of one safety device the design of the channels may be identical in terms of hardware and software. In the case of a two-channel PESSRAL used for complex solutions (e.g. combinations of several safety functions) and where the processes or conditions are not definitely verifiable, diversity for hardware and software should be considered. The structure includes a function which compares internal signals (e.g. bus comparison) and/or output signals which are relevant to safety functions in order to aid failure detection. At least two independent shut down paths are needed so that a shut down can be caused either by the channels themselves or by the comparator. The comparison itself shall also be subject to the failure recognition.

Components and functions	Measure No.	Description of measures
Processing units	**M 2.1**	**Failure correcting hardware** Description: Such units can be realized using special failure recognizing or failure correcting circuit techniques. These techniques are known for simple structures.
	M 2.2	**Self-test by software** Description: All the functions of the processing unit, which are used in the safety related application shall be tested cyclically. These tests can be combined with the test of the sub-components, e.g. memories, I/O's etc.
	M.2.3	**Software self-test supported by hardware** Description: A special hardware facility is used for the failure detection which supports the self-test functions. For example, a monitoring unit which checks the periodic output of certain bit patterns.
	M.2.4	**Comparator for 2 channel structures** Description: 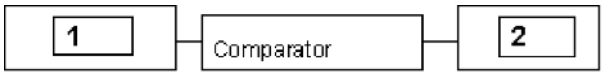 Two channels with hardware comparator: a) signals of both processing units are compared using a hardware unit cyclically or continuously. The comparator can be an externally tested unit or designed as a self-monitoring device or b) signals of both channels are compared using a processing unit. The comparator can be an externally tested unit or designed as a self-monitoring device.
	M.2.5	**Reciprocal comparison of 2 channels** Description: 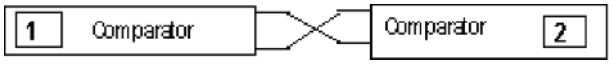 Two redundant processing units are used which exchange safety relevant data reciprocally. A comparison of the data are carried out by each unit.

Components and functions	Measure No.	Description of measures
Invariant Memory Ranges (ROM, EPROM...)	**M.3.1**	**Block safety procedure with one-word-redundancy (e.g. signature formation via ROM with single word width)** Description: In this test, the contents of the ROM is compressed by a certain algorithm to at least one memory word. The algorithm e.g. cyclic redundancy check (CRC), can be realized using hardware or using software.
	M.3.2 **M 3.3**	**Word saving with multi-bit-redundancy (e.g. modified hamming code)** Description: Every word of the memory is extended by several redundant bits to produce a modified hamming code with a hamming distance of at least 4. Every time a word is read, one can determine whether a corruption has taken place by checking the redundant bits. If a difference is found, the system has to go into a safe state. **Block safety procedure with block replication** Description: The address space is equipped with two memories. The first memory is operated in the normal manner. The second memory contains the same information and is accessed in parallel to the first. The outputs are compared and a failure is assumed if a difference is detected. In order to detect certain kinds of bit errors, the data shall be stored inversely in one of the two memories and inverted once again when read. In the software procedure, the contents of both memory areas are compared cyclically using a program.
	M 3.4	**Block safety procedure with multiword redundancy** Description: This procedure calculates a signature using a CRC algorithm, but the resulting value is at least two words in size. The extended signature is stored, recalculated and compared as in a single-word case. A failure message is produced if a difference occurs.
	M 3.5	**Word saving one bit redundancy (e.g. ROM monitoring with parity bit)** Description: Every word of the memory is extended by one bit (the ”parity” bit) which completes each word to an even or odd number of logical 1’s. The parity of the data word is checked each time it is read. If the wrong number of 1’s is found, a failure message is produced. The choice of even or odd parity should be made such that whichever of zero word (nothing but 0s) and the one word (nothing but 1’s) is the more unfavourable in the event of failure, then that word is not a valid code. Parity can also be used to detect addressing failure, when the parity is calculated for the concatenation of the data word and its address.

Components and functions	Measure No.	Description of measures
Variable memory ranges	**M 4.1**	**Check via test pattern against static or dynamic faults, e.g. RAM test "walkpath"** Description: The memory range to be tested is initialized by a uniform bit stream . The first cell is then inverted and the remaining memory area is inspected to ensure that the background is correct. After this, the first cell is re-inverted to return to its original value and the whole process is repeated for the next. A second run of the "wandering bit model" is carried out with an inverse background pre-assignment. If a difference occurs the system shall go into a safe state
	M.4.2 **M.4.3**	**Block safety procedures with block replication, e.g. double** **RAM with hardware or software comparison** Description: The address space is equipped with two memories. The first memory is operated in the normal manner. The second memory contains the same information and is accessed in parallel to the first. The outputs are compared and a failure is assumed if a difference is detected. In order to detect certain kinds of bit errors, the data shall be stored inversely in one of the two memories and inverted once again when read. In the software procedure, the contents of both memory areas are compared cyclically using a program. **Inspection to check for static and dynamic failures e. g. "GALPAT"** Description: a) RAM test "galpat": An inverse element is written into the standard pre assigned memory and then all the remaining cells are inspected to ensure that their contents are correct. After every reading access to one of the remaining cells, the inversely described cell is also inspected and read in addition to this. This process is repeated for every cell. A second run is carried out with an inverse pre-assignment. A failure is assumed if there is a difference; or b) Transparent "galpat" test: At the beginning of the test, a "signature" is formed using software or also hardware regarding the content of the memory range to be tested and this is stored in the register; this corresponds to the pre-assignment of the memory in the galpat test. The contents are now written into the test cell in an inverted way and inspects the contents of the remaining cells. The contents of the test cell are also read after every reading access to one of these cells. Since the contents of the remaining cells is indeed unknown, their contents are not inspected individually, but by forming a signature once again. After this first run for the first cell, a second run for this cell takes place with contents which have been inverted several times - therefore contents which are real again. Thus, the original contents of the memory are re established. All the other memory cells are tested in the same manner. A failure is assumed if there is a difference.

Components and functions	Measure No.	Description of measures
I / O units and interfaces	**M 5.1**	**Multi-channel parallel input** Description: This is a data flow dependent comparison of independent inputs complying with a defined tolerance area (time value).
	M.5.2	**Output read back (monitored output)** Description: This is a data flow dependent comparison of outputs with independent inputs complying with a defined tolerance area (time, value). The failure cannot always be related to the defective output.
	M.5.3	**Multi-channel parallel output** Description: This is a data flow dependent output redundancy. Failure recognition takes place directly via the technical process or via external comparators.
	M.5.4	**Code safety** Description: This procedure protects the input and output information with regard to coincident failures and systematic failures. It provides data flow dependent failure recognition of the input and output units with information redundancy or/and time redundancy.
	M.5.5	**Test pattern (model)** Description: This is a data flow independent cyclical test of input and output units carried out with the aid of defined testing pattern to compare observations with the corresponding expected values. The testing pattern information, the testing pattern reception and testing pattern evaluation have to be independent from each other. It has to be assumed that all possible input patterns are tested.

Components and functions	Measure No.	Description of measures
Clock	**M 6.1**	**Watch dog with separate time base** Description: Hardware timer with separate time base triggered by correct operation of the program.
	M.6.2	**Reciprocal monitoring** Description: Hardware timer with separate time base triggered by the correct operation of the program of the other processor.
Program sequence	**M 7.1**	**Combination of timing and logical monitoring of program sequence** Description: A time based facility monitoring the program sequence is re-triggered only if the sequence of the program sections is executed correctly.

Annex J
(normative)

Pendulum shock tests

J.1 General

Due to the fact that a European Standard does not exist for pendulum shock tests on glass (see CEN/TC 129), tests to fulfil the requirements of 5.4.2.3.1, 5.5.3.1.3 and 5.5.6.3 shall be carried out according to the following prescriptions.

J.2 Test rig

J.2.1 Hard pendulum shock device

The hard pendulum shock device shall be a body according to Figure J.1. This body consists of a shock ring made of steel S 235 JR, according to EN 10025-2:2004 and a case made of steel E 295, according to EN 10025-2:2004. The overall mass of this body will be brought up to 10 kg ± 0,01 kg by filling with lead balls of a diameter of 3,5 mm ± 0,25 mm.

J.2.2 Soft pendulum shock device

The soft pendulum shock device shall be a small shot bag according to Figure J.2 made of leather, which is filled with lead balls of a diameter of 3,5 mm ± 1 mm up to an overall mass of 45 kg ± 0,5 kg.

J.2.3 Suspension of the pendulum shock device

The pendulum shock device shall be suspended by a wire rope of about 3 mm diameter in such a way that the horizontal distance between the outer edge of the free hanging shock device and the panel to be tested does not exceed 15 mm.

The pendulum length (lower end of the hook to reference point of the shock device) shall be at least 1,50 m.

J.2.4 Pulling and triggering device

The suspended pendulum shock device shall be swung away from the panel by a pulling and triggering device and thus lifted to the falling height required in J.4.2 and J.4.3. The triggering device shall not give an additional impulse to the pendulum shock device in the moment of releasing.

J.3 Panels

A panel of doors shall be complete including its guidance elements; a panel of walls shall have the intended size and fixations. The panels shall be fixed to a frame or other appropriate construction in such a way that at the fixation points, no deformations under test conditions are possible (stiff fixation).

A panel shall be submitted to the tests in the intended manufacturing finish (machined edges, holes, etc.).

J.4 Test procedure

J.4.1 The tests shall be carried out at a temperature of 23 °C ± 2 °C. The panels shall be stored directly before the tests at least 4 h at that temperature.

J.4.2 The hard pendulum shock test shall be carried out with the device according to J.2.1 with a falling height of 500 mm (see Figure J.3).

J.4.3 The soft pendulum shock test shall be carried out with the device according to J.2.2 with a falling height of 700 mm (see Figure J.3).

For front-mounted doors the falling height shall be increased to 1 400 mm (see 5.5.6.3.3).

J.4.4 The pendulum shock device shall be brought to the required falling height and released. It shall hit the panel in the middle of its width and at a height of 1,0 m ± 0,05 m above the floor level intended for the panel.

The falling height is the vertical distance between the reference points (see Figure J.3).

J.4.5 One test only is required for each of the devices called for in J.2.1 and J.2.2. The two tests shall be carried out on the same panel.

J.5 Interpretation of the results

The requirements of the standard are fulfilled if after the tests there:

a) is no total damage of the panel;

b) are no cracks in the panel;

c) are no holes in the panel;

d) is no leaving its guiding elements;

e) is no permanent deformation of the guiding elements;

f) is no damage on the surface of the glass except a mark of 2 mm maximum in diameter without cracks and after successful repetition of the soft pendulum test.

J.6 Test report

The test report shall contain at least the following information:

a) name and address of the laboratory having made the tests;

b) date of the tests;

c) dimensions and construction of the panel;

d) fixation of the panel;

e) falling height of the tests;

f) number of tests carried out;

g) signature of the responsible for these tests.

J.7 Exceptions from the tests

The pendulum shock tests need not be made, if panels according to Tables J.1 and J.2 are used, since they are known to fulfil the tests.

It should be noted that National Building Regulations may demand higher requirements.

Table J.1 — Plane glass panels to be used in walls of the car

Type of glass	Diameter of inscribed circle	
	1 m maximum	**2 m maximum**
	Minimum thickness mm	**Minimum thickness** mm
Laminated toughened	8 (4 + 4 + 0,76)	10 (5 + 5 + 0,76)
Laminated	10 (5 + 5 + 0,76)	12 (6 + 6 + 0,76)

Table J.2 — Plane glass panels to be used in horizontally sliding doors

Type of glass	Minimum thickness mm	Width mm	Free door height m	Fixing of the glass panels
Laminated toughened	16 (8 + 8 + 0,76)	360 to 720	2,10 max	2 fixings upper and lower
Laminated	16 (8 + 8 + 0,76)	300 to 720	2,10 max	3 fixings upper/lower and one side
	10 (6 + 4 + 0,76) (5 + 5 + 0,76)	300 to 870	2,10 max	all sides
NOTE The values of this table are valid under the condition that in case of 3- or 4- side fixing the profiles are rigidly connected to another.				

Dimensions in millimetres

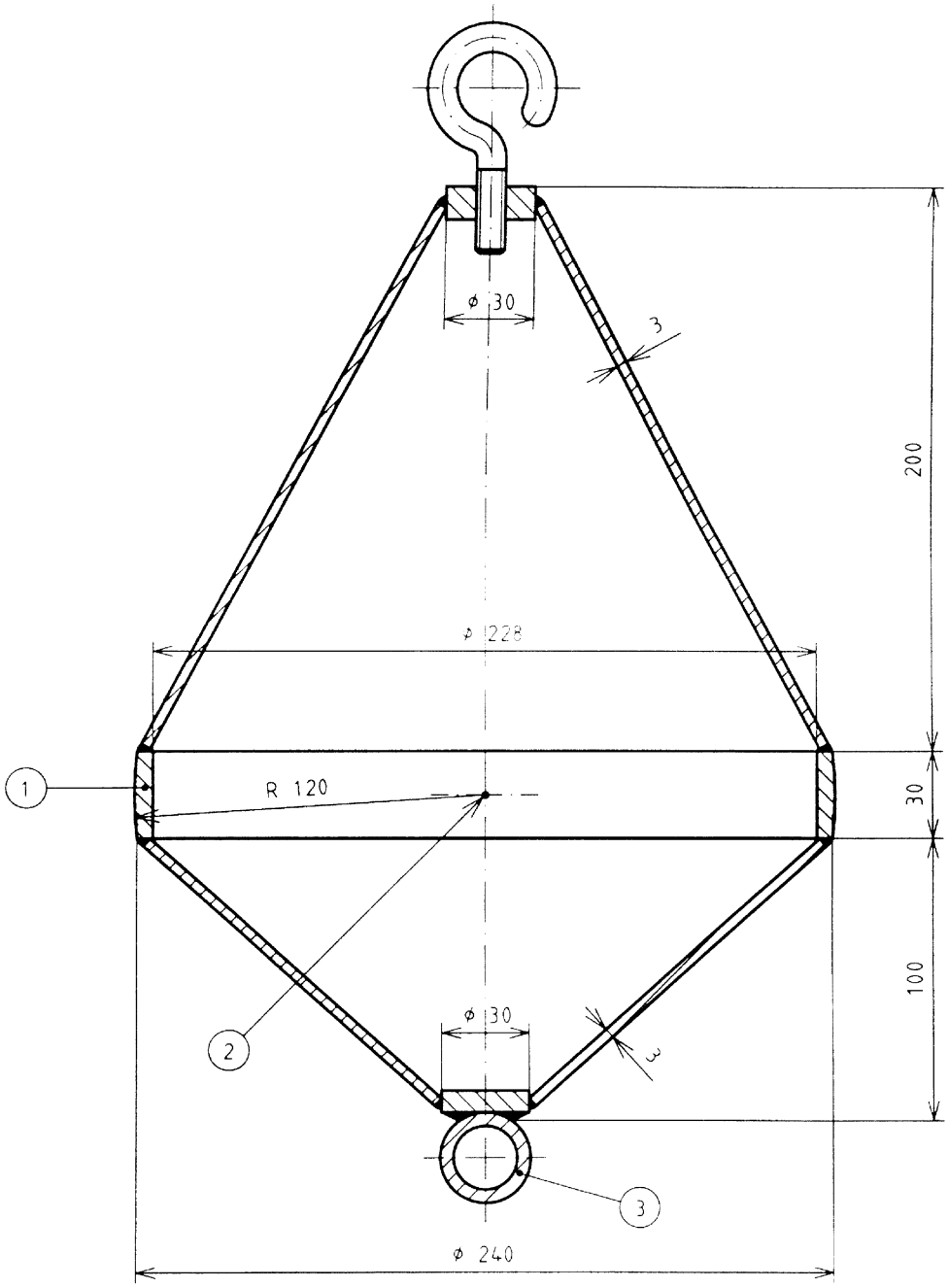

Key

① shocking ring

② reference point for measuring the falling height

③ triggering device attachment

Figure J.1 — Hard pendulum shock device

Dimensions in millimetres

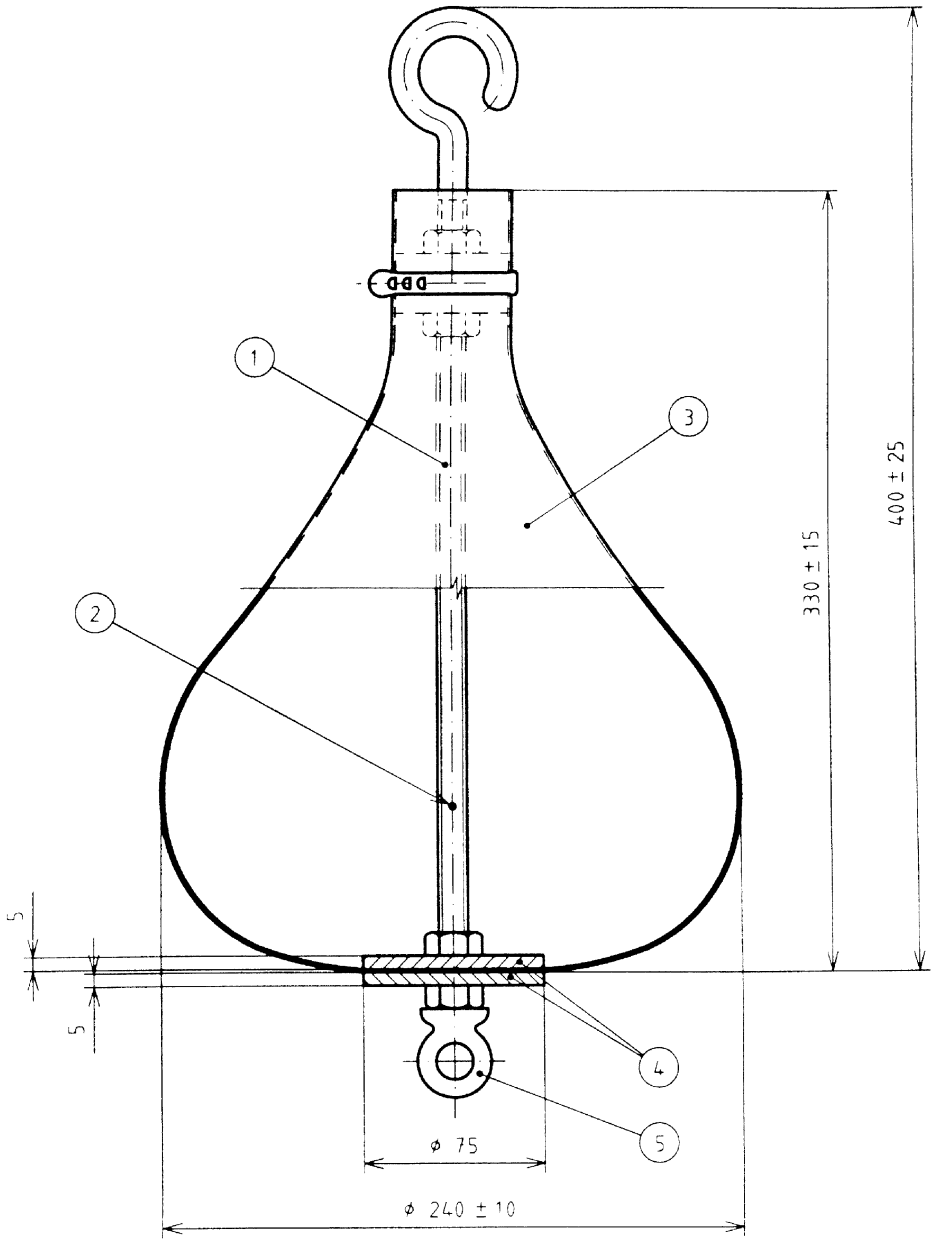

Key

① screwed rod

② reference point for measuring the falling height in the plane of the maximum diameter

③ leather bag

④ steel disk

⑤ triggering device attachment

Figure J.2 — Soft pendulum shock device

Dimensions in millimetres

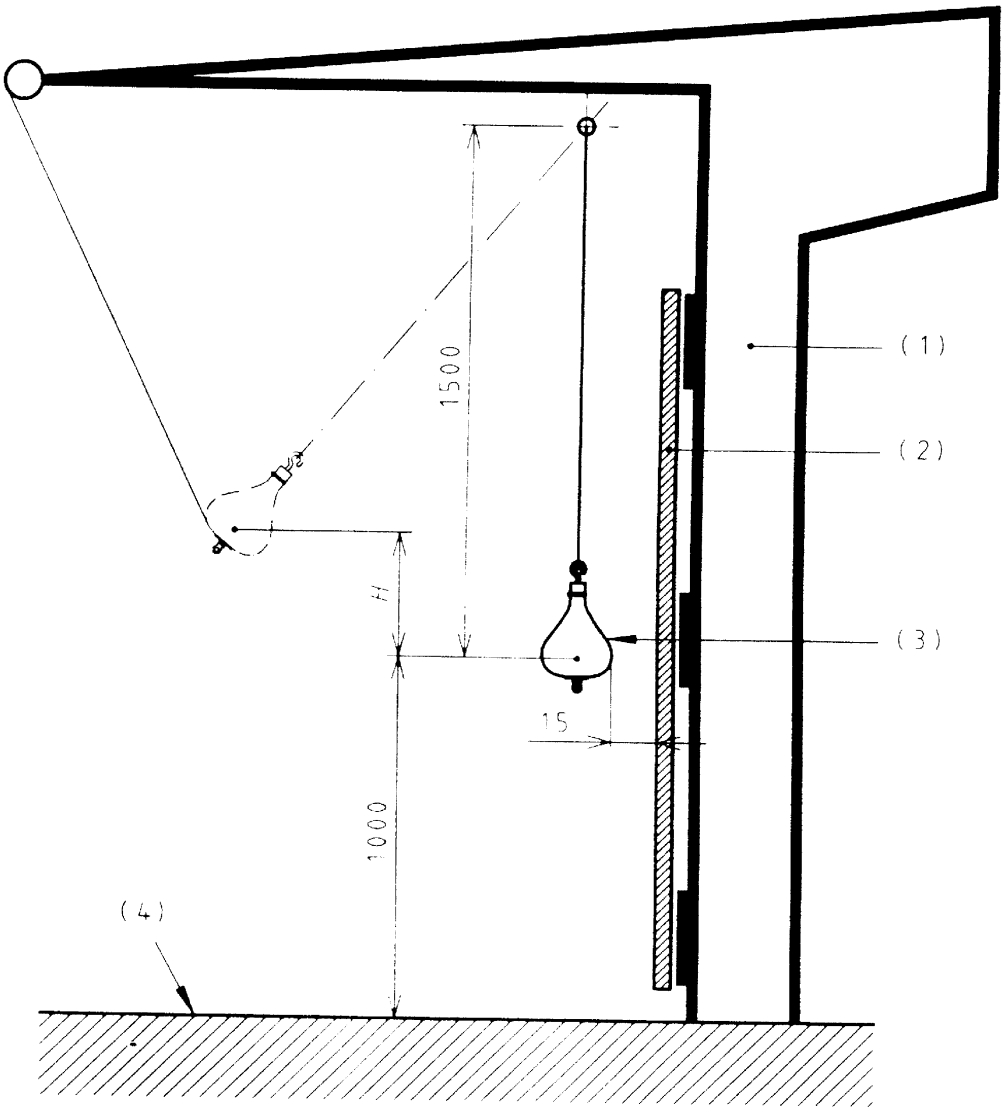

Key

① frame

② glass panel to be tested

③ shock device

④ floor level with respect to the glass panel to be tested

H falling height

Figure J.3 — Test rig falling height

Annex K
(informative)

Traction evaluation

K.1 General provisions

Traction shall be ensured at all times taking into account:

— normal travel;

— loading the car at floor level; and

— retardation due to an emergency stop.

As a general rule, considerations shall be given to allow slip to occur if the vehicle is stalled in the well for any reason.

If in case of change of angle of inclination the above condition is not met, the lift should be provided with a similar safety device as for positive drive lifts.

The following dimensioning procedure is a guidance which can be used for the evaluation of traction. For the considered application it necessary to take into consideration:

— the inclination;

— the changing of slope (most unfavourable case);

— frictions on line;

— the inertia of rollers and sheaves supporting the ropes.

The results are safe, as shown by experience, due to built-in safety margins. Therefore the following elements need not be taken into consideration in detail:

a) rope construction;

b) type and amount of lubrication;

c) material of sheaves and ropes;

d) manufacturing tolerances.

K.2 Traction calculation

K.2.1 Basic formulae

The following formulae shall be applied:

$$\frac{T_1}{T_2} \leq e^{fa}$$ for car loading and emergency braking conditions;

$\frac{T_1}{T_2} \geq e^{fa}$ for counterweight stalled conditions (counterweight resting on the buffers and the machine rotating in the "up" direction):

where

α is the angle of wrap of the ropes on the traction sheave;

f is the friction factor;

T_1, T_2 are the forces in the portion of the ropes situated at either side of the traction sheave.

K.2.2 Evaluation of T_1 and T_2

K.2.2.1 Car loading condition

The static ratio T_1/T_2 shall be evaluated for the worst case depending on the position of the vehicle in the well with 125 % of the rated load. The case 5.5.2.2 requires special treatment, if not covered by the factor 1,25 for the load.

K.2.2.2 Emergency braking condition

The dynamic ratio T_1/T_2 shall be evaluated for the worst case depending on the position of the vehicle in the well and the load conditions (empty, or with rated load).

Each moving element should be considered with its proper rate of acceleration, taking into account the reeving ratio of the installation.

In no case the rate of acceleration to consider will be less than:

a) 0,50 m/s^2 for normal case;

b) 0,80 m/s^2 when reduced stroke buffers are used.

K.2.2.3 Counterweight stalled condition

The static ratio T_1/T_2 shall be evaluated for the worst case depending on the position of the vehicle in the well and the load conditions (empty, or with rated load).

K.2.2.4 Sagging effect

The sagging effect shall be taken into account between the traction pulley and the vehicle or the counterweight that varies the angle of wrap according to the position of the moving elements.

K.2.3 Evaluation of the friction factor f

K.2.3.1 Grooving considerations

K.2.3.1.1 Semi-circular and semi-circular undercut grooves

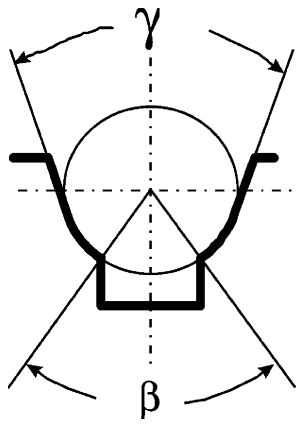

Key

β undercut angle

γ groove angle

Figure K.1 — Semi-circular groove, undercut

The following formula shall be used:

$$f = \mu \cdot \frac{4\left(\cos\frac{\gamma}{2} - \sin\frac{\beta}{2}\right)}{\pi - \beta - \gamma - \sin\beta + \sin\gamma}$$

where

β is the value of the undercut angle;

γ is the value of the groove angle;

f is the friction factor;

μ is the friction coefficient.

The maximum value of the undercut angle β shall not exceed 106° (1,83 rad), which corresponds to 80 % undercut.

The value of the groove angle γ shall be given by the manufacturer according to the grooving design. In no case it should be less than 25° (0,43 rad).

K.2.3.1.2 V-grooves

Where the groove has not been submitted to an additional hardening process, in order to limit the deterioration of traction due to wear, an undercut is necessary.

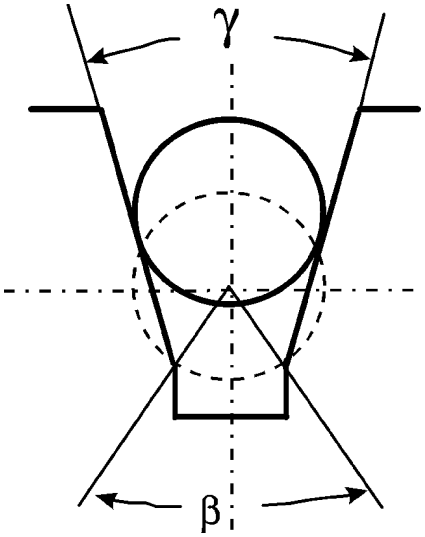

Key

β undercut angle

γ groove angle

Figure K.2 — V-groove

The following formulae apply:

— in the case of car loading and emergency braking:

$$f = \mu \cdot \frac{4\left(1 - \sin\frac{\beta}{2}\right)}{\pi - \beta - \sin\beta}$$ for non-hardened grooves;

$$f = \mu \cdot \frac{1}{\sin\frac{\gamma}{2}}$$ for hardened grooves;

— in the case of counterweight stalled conditions:

$$f = \mu \cdot \frac{1}{\sin\frac{\gamma}{2}}$$ for hardened and non-hardened grooves

where

β is the value of the undercut angle;

γ is the value of the groove angle;

f is the friction factor;

μ is the friction coefficient.

The maximum value of the undercut angle β shall not exceed 106° (1,83 rad), which corresponds to 80 % undercut. In no case, angle γ shall be less than 35° for lifts.

K.2.3.2 Friction coefficient consideration

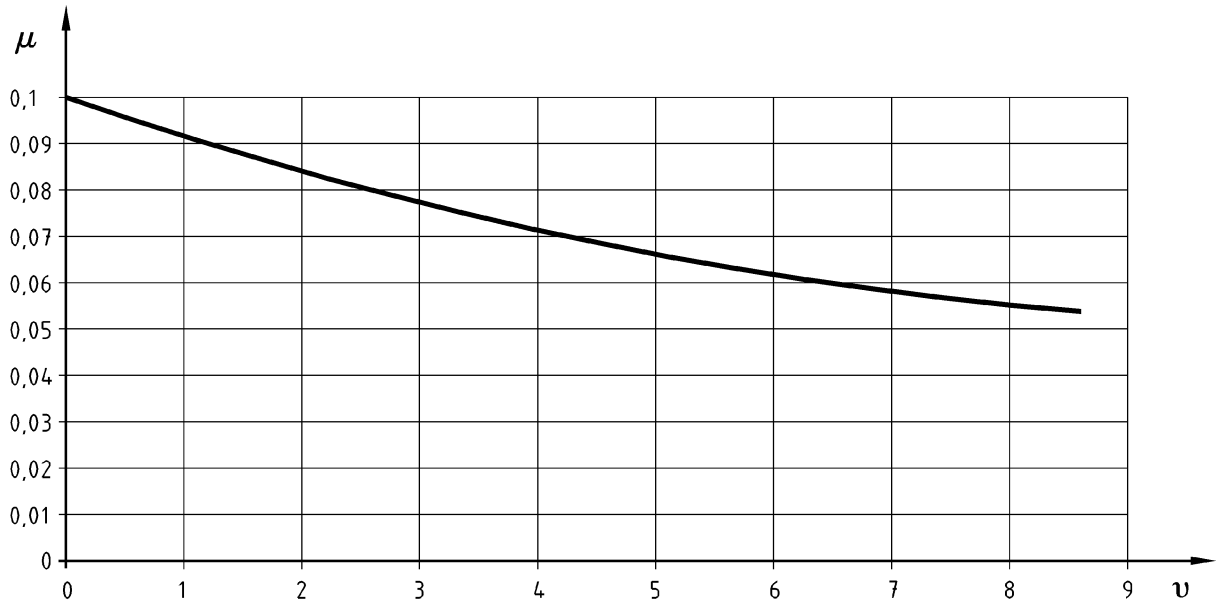

Figure K.3 — Minimum friction coefficient

The following values apply:

— Loading conditions $\mu = 0{,}1$

— Emergency braking conditions $\mu = \dfrac{0{,}1}{1+\dfrac{v}{10}}$;

— Counterweight stalled conditions $\mu = 0{,}2$

where

μ is the friction coefficient;

v is the rope speed at rated speed of the vehicle in m/s.

K.3 Practical example

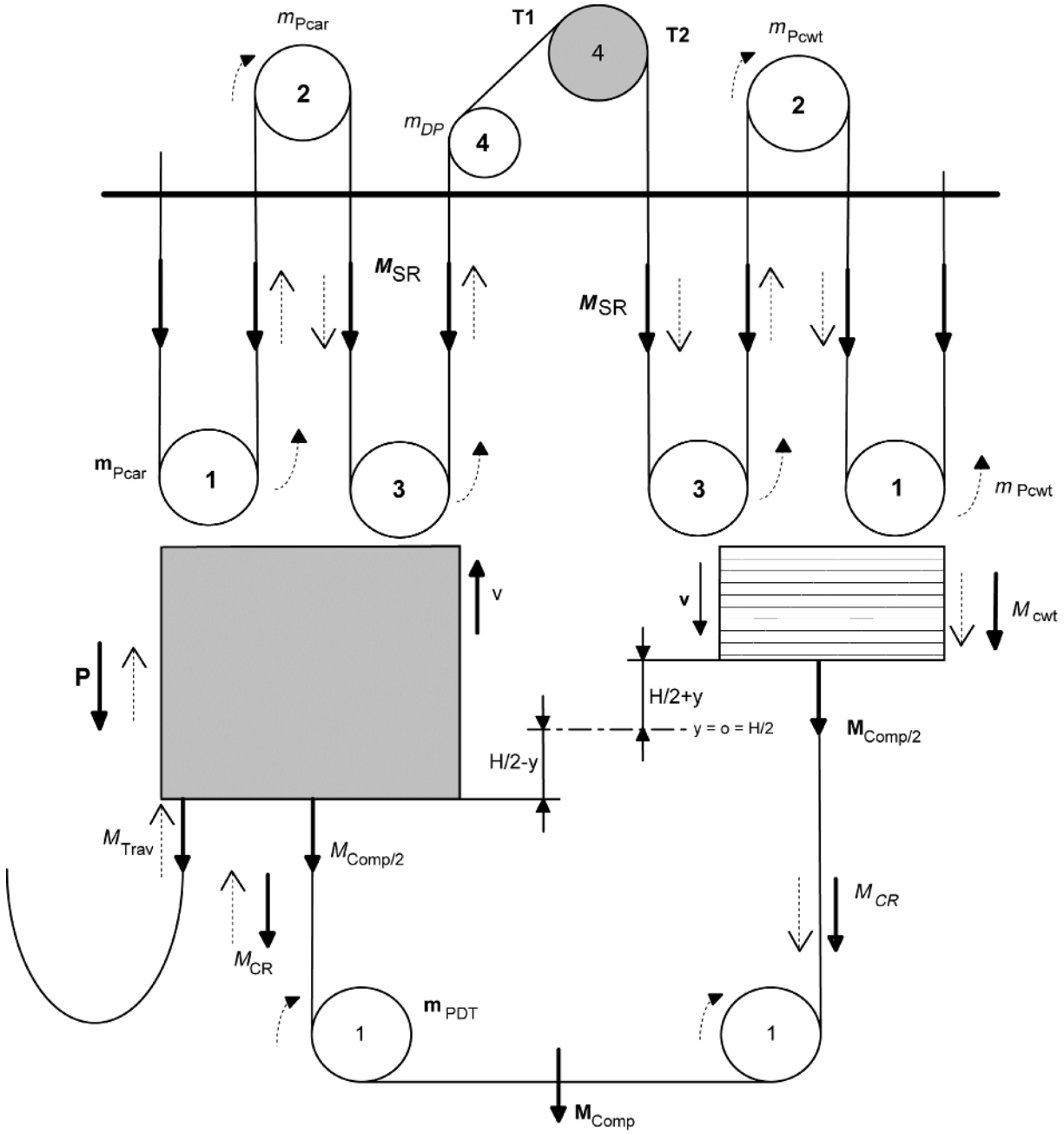

Key

1, 2, 3, 4 is the speed factor of pulleys (example: 2 = 2 · v_{car}).

Figure K.4 —General case

The following formulae apply:

a) Machinery located above:

$$T_1 = \frac{(P + Q + M_{\text{CRcar}} + M_{\text{Trav}})}{r} \cdot (g_{\text{i}} \mp a_{\text{i}}) + \frac{M_{\text{Comp}}}{2 \cdot r} g_{\text{i}} + M_{\text{SRcar}} \left(g_{\text{i}} \mp a_{\text{i}} \cdot \frac{r^2 + 2}{3} \right) \mp \left(\frac{i_{\text{PTD}} \cdot m_{\text{PTD}}}{2 \cdot r} a_{\text{i}} \right)^{\text{I}}$$

$$\mp (\text{m}_{\text{DP}} \cdot \text{r} \cdot \text{a}_{\text{i}})^{\text{II}} \mp \left[\sum_{\text{i}=1}^{\text{r}-1} (\text{m}_{\text{Pcar}} \cdot \text{i}_{\text{Pcar}} \cdot \text{a}_{\text{i}}) \right]^{\text{III}} \pm \frac{\text{FR}_{\text{car}}}{\text{r}}$$

$$T_2 = \frac{M_{\text{cwt}} + M_{\text{CRcwt}}}{r} \cdot (g_{\text{i}} \pm a_{\text{i}}) + \frac{M_{\text{Comp}}}{2 \cdot r} \cdot g_{\text{i}} + M_{\text{SRcwt}} \left(g_{\text{i}} \pm a_{\text{i}} \cdot \frac{r^2 + 2}{3} \right) \pm \left(\frac{i_{\text{PTD}} \cdot m_{\text{PTD}}}{2 \cdot r} \cdot a_{\text{i}} \right)^{\text{IV}}$$

$$\pm (\text{m}_{\text{DP}} \cdot \text{r} \cdot \text{a}_{\text{i}})^{\text{II}} \pm \left[\sum_{\text{i}=1}^{\text{r}-1} (\text{m}_{\text{Pcwt}} \cdot \text{i}_{\text{Pcwt}} \cdot \text{a}_{\text{i}}) \right]^{\text{V}} \mp \frac{\text{FR}_{\text{cwt}}}{\text{r}}$$

b) Machinery located below:

$$T_1 = \frac{(P + Q + M_{\text{CRcar}} + M_{\text{Trav}})}{r} \cdot (g_{\text{i}} \mp a_{\text{i}}) + \frac{M_{\text{Comp}}}{2 \cdot r} \cdot g_{\text{i}} + M_{\text{SR1car}} \cdot (g_{\text{i}} \mp a_{\text{i}}) + M_{\text{SR2car}} \cdot \left(g_{\text{i}} \mp a_{\text{i}} \cdot \frac{r^2 + 2}{3} \right)$$

$$\mp \left(\frac{\text{i}_{\text{PTD}} \cdot \text{m}_{\text{PTD}}}{2 \cdot \text{r}} \cdot \text{a}_{\text{i}} \right) \mp (\text{m}_{\text{DP}} \cdot \text{r} \cdot \text{a}_{\text{i}})^{\text{II}} \mp \left[\sum_{\text{i}=1}^{\text{r}-1} (\text{m}_{\text{Pcar}} \cdot \text{i}_{\text{Pcar}} \cdot \text{a}_{\text{i}}) \right]^{\text{III}} \pm \frac{\text{FR}_{\text{car}}}{\text{r}}$$

$$T_2 = \frac{M_{\text{cwt}} + M_{\text{CRcwt}}}{r} \cdot (g_{\text{i}} \pm a_{\text{i}}) + \frac{M_{\text{Comp}}}{2 \cdot r} g_{\text{i}} + M_{\text{SR1cwt}} \cdot (g_{\text{i}} \pm a_{\text{i}}) + M_{\text{SR2cwt}} \cdot \left(g_{\text{i}} \pm a_{\text{i}} \cdot \frac{r^2 + 2}{3} \right)$$

$$\pm \left(\frac{\text{i}_{\text{PTD}} \cdot \text{m}_{\text{PTD}}}{2 \cdot \text{r}} \cdot \text{a}_{\text{i}} \right)^{\text{IV}} \pm (\text{m}_{\text{DP}} \cdot \text{r} \cdot \text{a}_{\text{i}})^{\text{II}} \pm \left[\sum_{\text{i}=1}^{\text{r}-1} (\text{m}_{\text{Pcwt}} \cdot \text{i}_{\text{Pcwt}} \cdot \text{a}_{\text{i}}) \right]^{\text{V}} \mp \frac{\text{FR}_{\text{cwt}}}{\text{r}}$$

In the above formulae a_{i} has a positive value for the deceleration of the vehicle and a negative value for the acceleration of the vehicle. The symbols ± and ∓shall be used in such a way that the upper operation is applicable in case the vehicle is moving up and the lower operation in case the vehicle is moving down.

The above formulae may be also used for the empty vehicle by deleting Q. In this case T_1 becomes T_2 and T_2 becomes T_1.

Conditions:

I is only for the vehicle in upper position;

II is for the deflection pulley vehicle or counterweight side;

III is only for reeving > 1;

IV is only for the counterweight in upper position;

V is only for reeving > 1.

where

a_{i} is the braking retardation (positive value) of the vehicle in the direction of travel in metres per square second;

α is the inclination of the travel path;

FR_{car} is the frictional force in the well (efficiency of bearings car side and friction on guide rails, etc.) in newtons;

FR_{cwt} is the frictional force in the well (efficiency of bearings counterweight side and friction on guide rails, etc.) in newtons;

g_i is the acceleration in the direction of travel (i.e. the standard acceleration g_n of free fall multiplied with sinus α) in metres per square second;

H is the travel height in metres;

i_{Pcar} is the number of pulleys on vehicle side (without deflection pulleys);

i_{Pcwt} is the number of pulleys on counterweight side (without deflection pulleys);

i_{PTD} is the number of pulley for tension device;

M_{Comp} is the mass of tension device including mass of pulleys in kilograms;

M_{CR} is the actual mass of compensation ropes $\left([0{,}5 \cdot H \pm y] \cdot n_c \cdot rope\ weight\ per\ unit\ length\right)$ in kilograms;

M_{cwt} is the mass of counterweight including mass of pulleys in kilograms;

M_{CRcar} is the mass M_{CR} on vehicle side;

M_{CRcwt} is the mass M_{CR} on counterweight side;

M_{SR} is the actual mass of suspension ropes $([0{,}5 \cdot H \pm y] \cdot n_s \cdot \text{rope weight per unit length})$ in kilograms;

M_{SRcar} is the mass M_{SR} on vehicle side.

In the case of machine below, the rope leading from the machine to the pulley(s) in the headroom is M_{SR1car} and rope leading from pulley(s) in the headroom to the vehicle is M_{SR2car};

M_{SRcwt} is the mass M_{SR} on counterweight side.

In the case of machine below, the rope leading from the machine to the pulley(s) in the headroom is M_{SR1cwt} and rope leading from pulley(s) in the headroom to the counterweight is M_{SR2cwt};

M_{Trav} is the actual mass of travelling cable $\left([0{,}25H \pm 0{,}5y] \cdot n_t \cdot \textit{travelling cable weight per unit length}\right)$ in kilograms;

m_{DP} is the reduced mass of deflection pulley on car/counterweight side J_{PD}/R^2 in kilograms;

m_{Pcar} is the reduced mass of pulley on vehicle side J_{Pcar}/R^2 in kilograms;

m_{Pctw} is the reduced mass of pulley on counterweight side J_{Pcwt}/R^2 in kilograms;

m_{PTD} is the reduced mass of pulley for tension device (2 pulleys) J_{PTD}/R^2 in kilograms;

n_c is the number of compensating ropes;

n_s is the number of suspension ropes;

n_t is the number of travelling cables;

P is the masses of the empty vehicle in kilograms;

Q is the rated load in kilograms;

r is the reeving factor;

T_1, T_2 is the force exerted on rope in newtons;

y is on the level $0{,}5 \cdot H \rightarrow y = 0$ in metres;

$\rightarrow$ is the static force;

$\longrightarrow$ is the dynamic force.

Annex L
(normative)

Evaluation of safety factor for suspension ropes

L.1 General

With reference to 5.6.2.1.2, this annex describes the method of evaluation of the static safety factor S_f for the suspension ropes. The method takes into consideration:

— traditional materials used in the design of ropes drives for elements as steel/cast iron traction sheaves;

— steel wire ropes according to European Standards;

— a sufficient life time of the ropes assuming a regular maintenance and inspection.

L.2 Equivalent number N_{equiv} of pulleys

L.2.1 General

The number of bends and the degree of severity of each bend cause deterioration of the rope. This is influenced by the type of grooves (U- or V- groove) and whether the bend is reversed or not.

The degree of severity of each bend can be equated to a number of simple bends.

A simple bend is defined by the rope travelling over a semi-circular groove where the radius of the groove is about 5 % to 6 % greater than the nominal rope radius.

The number of simple bends corresponds to an equivalent number of pulleys N_{equiv}, which can be derived from:

$$N_{equiv} = N_{equiv(t)} + N_{equiv(p)}$$

where

$N_{equiv\ (t)}$ is the equivalent number of traction sheaves;

$N_{equiv\ (p)}$ is the equivalent number of deflection pulleys.

L.2.2 Evaluation of $N_{equiv\ (t)}$

Values of $N_{equiv\ (t)}$ can be taken from Table L.1.

Table L.1 — Evaluation of equivalent number of traction sheaves $N_{equiv(t)}$

V-grooves	V-angle (γ)	-	35°	36°	38°	40°	42°	45°
	$N_{equiv(t)}$	-	18,5	15,2	10,5	7,1	5,6	4,0
U-Undercut grooves	U-angle (β)	75°	80°	85°	90°	95°	100°	105°
	$N_{equiv(t)}$	2,5	3,0	3,8	5,0	6,7	10,0	15,2

For U-grooves without undercut: $N_{\text{equiv (t)}} = 1$.

L.2.3 Evaluation of $N_{\text{equiv(p)}}$

A reversed bend is only considered if the distance from the ropes contact on two consecutive stationary pulleys does not exceed 200 times the rope diameter.

$$N_{\text{equiv(p)}} = \left(N_{\text{ps}} + 4 \cdot N_{\text{pr}}\right) \cdot K_{\text{p}}$$

where

K_{p} is the factor of ratio between sheave and pulley diameters;

N_{ps} is the number of pulleys with simple bends;

N_{pr} is the number of pulleys with reversed bends.

with: $K_{\text{p}} = \left(\dfrac{D_{\text{t}}}{D_{\text{p}}}\right)^4$

where

D_{p} is the average diameter of all pulleys, traction sheave excluded;

D_{t} is the diameter of the traction sheave.

L.3 Static safety factor

For a given design of rope drive the minimum value of static safety factor can be selected from Figure L.1 taking into account the correct ratio of $D_{\text{t}}/d_{\text{r}}$ and the calculated N_{equiv}.

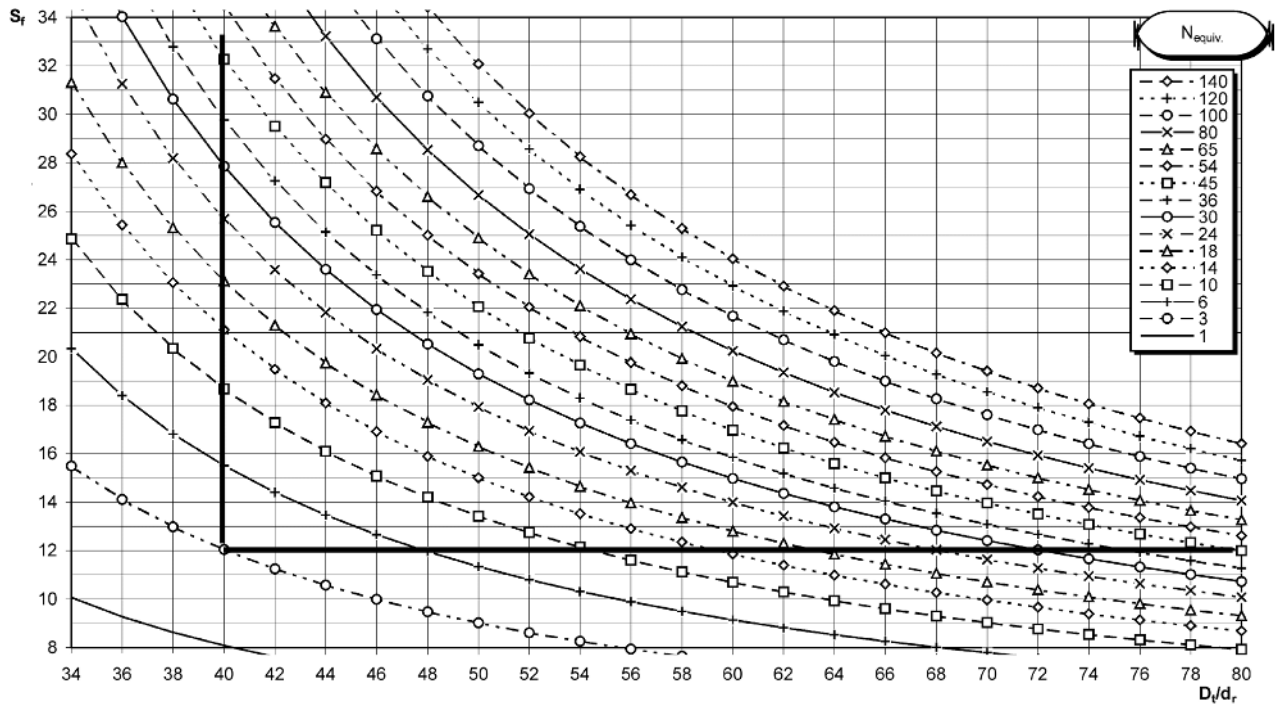

Figure L.1 — Evaluation of minimum safety factor

The curves of the Figure L.1 are based on the following formula:

$$S_f = 10^{\left(2{,}6834 - \frac{\lg\left(\frac{695{,}85.10^6 \cdot N_{equiv}}{\left(\frac{D_t}{d_r}\right)^{8{,}567}}\right)}{\lg\left(77{,}09\left(\frac{D_t}{d_r}\right)^{-2{,}894}\right)}\right)}.$$

where

D_t	is the diameter of traction sheave;
d_r	is the diameter of the ropes;
N_{equiv}	is the equivalent number of pulleys;
S_f	is the safety factor.

L.4 Examples

Examples of calculation of the equivalent number of pulleys N_{equiv} are given in Figures L.2 to L.4.

Example 1

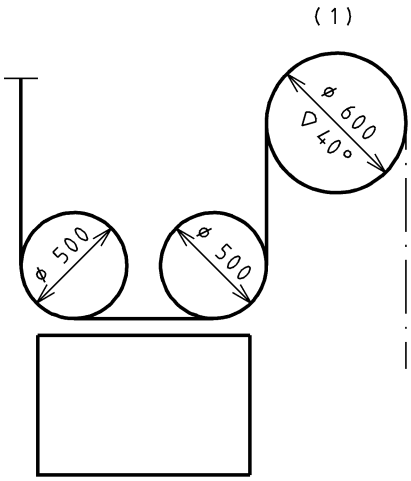

γ = 40°

$N_{equiv\ (t)}$ = 7,1

K_p = 2,07

$N_{equiv\ (p)}$ = 2 · 2,07 = 4,1

N_{equiv} = 11,2

NOTE No reversed bend because of moving pulley.

Key

(1) car side

Figure L.2 — 2 to 1 roping - V grooves

Example 2

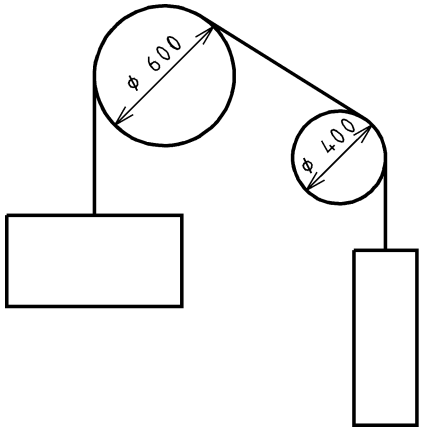

$\gamma = 40°$, $\beta = 90°$

$N_{equiv\ (t)} = 5$

$K_p = 5{,}06$

$N_{equiv\ (p)} = 5{,}06$

$N_{equiv} = 10{,}06$

Figure L.3— 1 to 1 roping - Undercut U grooves

Example 3

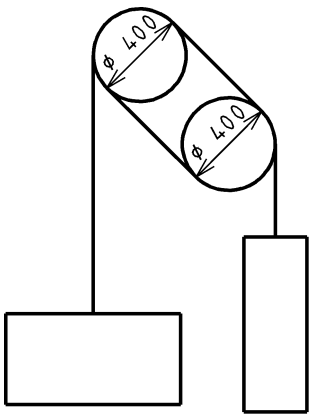

$N_{equiv\ (t)} = 1 + 1$

$K_p = 1$

$N_{equiv} = 4$

Figure L.4 — 1 to 1 roping (double wrap) - U grooves

Annex M
(informative)

Machinery spaces – Access (5.3.3)

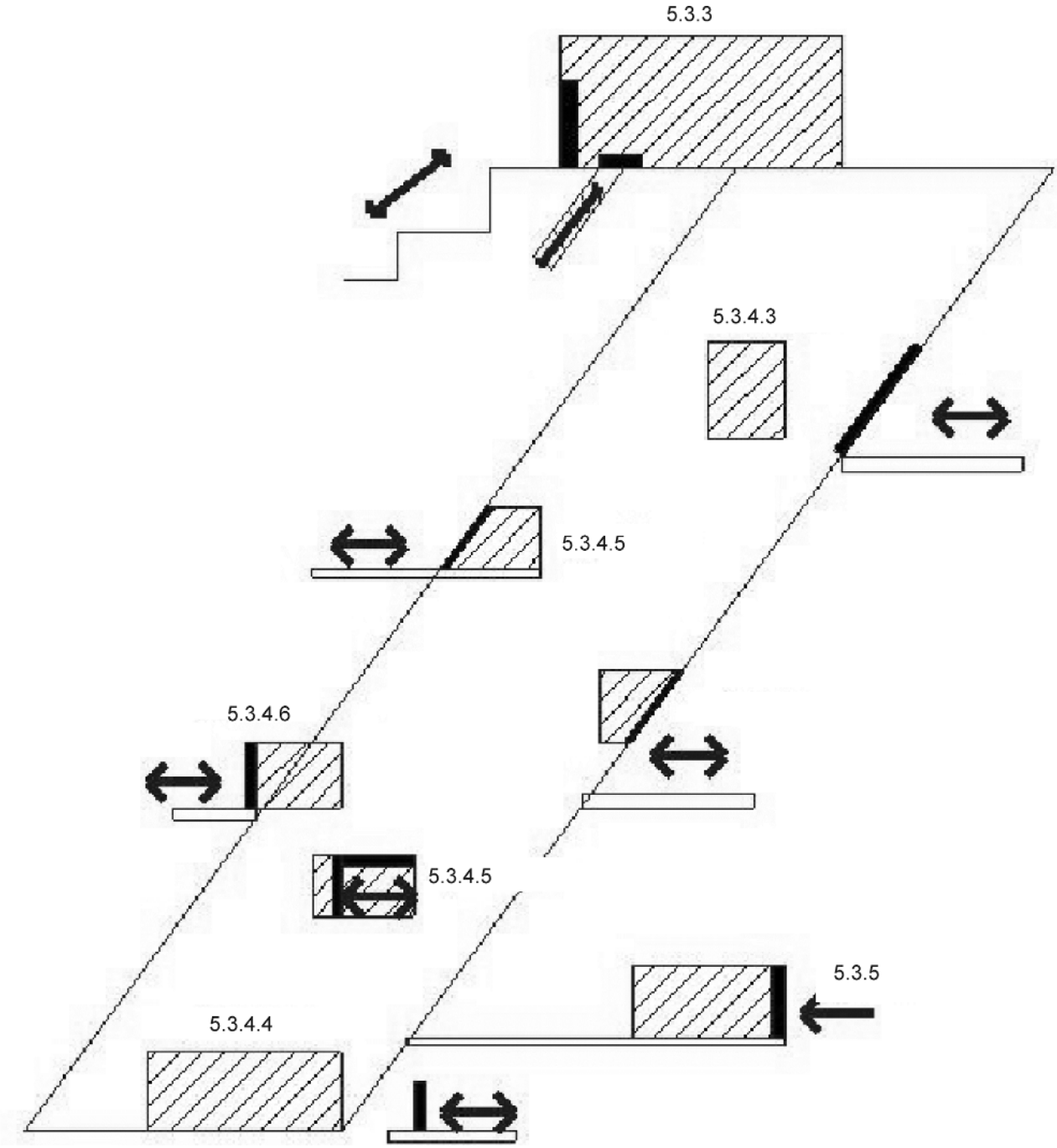

Figure M.1 — Machinery spaces and working stations – Access through doors and trap doors

Annex N
(informative)

Building interfaces

N.1 General provisions

The building structure shall be constructed to withstand loads and forces to which are subjected by lift equipment. If not specified differently in this standard for particular applications, this loads and forces are:

— Values resulting from the static masses and

— values resulting from moving masses and their emergency operation. The dynamic effect is represented by an impact factor of 2.

N.2 Support of guide rails

It is important that the guide rails of the lift are supported in such a way that the effects of movement of the building structure to which they are connected is minimized.

When considering buildings constructed of concrete, blockwork or bricks it can be assumed that the guide rail brackets which support the guides will not be subjected to displacement caused by movement of the well walls.

However, where the guide brackets are connected to the building fabric by steel beams, or by connection to timber frames, there may be deflection of this structure due to the load imposed by the vehicle through the guides and guide brackets. Additionally there may be movement of the lift supporting structure due to external forces such a wind loading, snow loading, etc.

Any deflection of these beams or frames should be taken into account during the calculations required in 5.7.

The total permissible deflection of the guide rails for the safe operation of the safety gear, etc, shall include any displacement of the guide rail due to deflection of the building fabric and the deflection of the guide it's self due to the load imparted on it by the vehicle.

It is therefore important that the persons responsible for the fabrication of these supporting structures communicate with the lift provider in order to ensure that they are suitable under all load conditions.

N.3 Ventilation of car, lift well and machinery spaces

N.3.1 General

The requirement to suitably ventilate the lift well and machinery spaces is often contained within local building regulations, either specifically, or as a general requirement as would be given for any building space where machinery is installed or persons are accommodated (for leisure, work, etc). As such this standard cannot provide exacting guidance on the specific requirements to ventilate such areas while well and machinery spaces are part of one larger and often complex total build environment.

To do so would bring conflict to these national requirements.

However some general guidance can be given.

N.3.2 Ventilation of the well and car

The comfort and safety of persons riding in the lift, working in the well or those who may become entrapped in the car or well should the vehicle become stalled between floors depends on many factors:

— Ambient temperature of the well as part of the building or even totally stand alone;

— Exposure to direct sunlight;

— Volatile organic component, $C0_2$, air quality;

— Fresh air access in well;

— Size of well, both in cross sectional area and height;

— Number, size, gaps around and location of landing doors;

— Expected heat output from installed equipment;

— Fire-fighting and smoke evacuation strategy and related BMS (building management system);

— Humidity, dust and fumes;

— Air flow (heat /cooling) and energy saving building technology applied;

— Air tightness of the well and the entire building.

The lift car shall be provided with sufficient ventilation aperture to ensure adequate flow of air for the maximum number of permitted occupants (see 5.5.16).

During normal operation and maintenance of the lift, generally the gaps around the landing doors, the opening/closing of these doors and the pump effect of the lift travelling within the well may be sufficient to provide for human needs the necessary air exchange between the staircases, lobbies and the well.

However for technical needs and in some cases for human needs, the air tightness of the well and the entire building, the environmental conditions, particularly higher ambient temperature, radiation, humidity, air quality, will result in the need for a permanent or on demand ventilation aperture(s) and/or (combined with) forced ventilation and/or fresh air entry. This can also be necessary when transporting certain items such as motorized vehicles where exhaust fumes can be hazardous. This can only be decided on a case by case basis.

Furthermore in the event of a prolonged stoppage (considering normal and accidental conditions) of the vehicle, further sufficient ventilation shall be granted.

In particular also attention shall be given for those buildings (new and in case of refurbishing) in which energy efficient design and technology is present.

Wells are not intended to be used as a means to ventilate other areas of the building.

In some cases this can be an extremely dangerous practice, such as industrial environments or underground car parks, where the drawing of dangerous gasses through the well may cause additional risk to persons travelling in the car. Under these considerations, the stale air from other areas of the building shall not be used to ventilate the well.

Where the lift well forms part of a fire fighting shaft particular care needs to be taken.

In these cases advice should be obtained by those who specialize in such equipment or from local building and fire regulations.

In order to allow the person responsible for the work on the building or construction to determine if/what ventilation needs to be provided related to the total lift installation as part of the building, the installer of the lift should provide the necessary information to allow suitable calculations and appropriate building design to be made. In other words they should keep each other informed of the facts necessary for and on the other hand, take the appropriate steps to ensure the proper operation and safe use and maintenance of the lift within this building.

N.3.3 Ventilation of machinery spaces

The ventilation of the machinery space is normally carried out to provide a suitable working environment for the engineer and the equipment installed into such spaces.

For this reason the ambient temperature of machinery spaces should be kept as given in the assumptions (see Introduction). Additional care shall be taken with regard to humidity and air quality to avoid technical problems e.g. condensation.

Failure to maintain these temperatures may result in the lift automatically removing it's self from service until such time as the temperature returns to its intended levels.

In order to allow the person responsible for the work on the building or construction to determine if/what ventilation needs to be provided in these machinery spaces as part of the building, the installer of the lift should provide the necessary information to allow suitable calculations and appropriate building design to be made. In other words they should keep each other informed of the facts necessary for and on the other hand, take the appropriate steps to ensure the proper operation, safe use and maintenance of the lift.

Annex O
(informative)

Environment: aspects to be considered for a risk analysis

The installation of a lift with partially enclosed well should be done after taking into account environment conditions in which the lift is required to operate.

A specific analysis of particular risks is necessary in order to define the safety devices needed and also to define the conditions and limits for use. The following aspects should be considered:

— wind;

— reduced visibility (night, fog, smog);

— lightning;

— snow load;

— snow pressure;

— forming of ice;

— moisture;

— falls of ice;

— avalanches;

— falls of stones;

— earthquakes;

— wave, flooding;

— underground waters;

— landslide, and other geologic events;

— falls of trees, falls due to the wind;

— fire, explosion;

— damage caused by a vehicle (car, truck, other motorized vehicle);

— obstacles due to aviation;

— communication or electrical line;

— electromagnetic phenomena;

— compensation relating to the outside equipment (artificial snow);

— physical/ chemical stress;

— crossroads (routes, ways, electrical lines, ski tracks, waters);

— buildings close to the site.

Annex P
(informative)

Determination of anti-slip properties for floor surfaces

P.1 General

The generally held requirement for anti-slip designs for floor surfaces needs to be made more precise for safe use in practice.

Procedures for determining and assessing the anti-slip properties of coverings have not been standardized before either internationally or on European level.

However, in the Federal Republic of Germany there have been tried and tested suitability procedures for determining the anti-slip properties of floor coverings for many years – DIN 51130 [15] or Employers' Liability Insurance Association rules for health and safety at work: BGR 181:Oct. 2003 [16].

The members of CEN/TC 10/WG 9 have checked this suitability procedure to see whether it can be applied to floor surfaces of lifts with an inclined travel path. The results obtained show that the DIN 51130 procedure for determining the anti-slip properties is suitable.

The decision on the DIN 51130 procedure does not exclude other, at least just as safe solutions, which could have been set out too in the technical rules of other member states of the European Union or other states contracted to the Agreement on the European Economic Area.

Test certificates from test centres that are registered in other member states of the European Union or in other states contracted to the Agreement on the European Economic Area are taken into consideration in the same way as DIN 51130 test certificates if the tests, test procedures and construction requirements on which the test certificates of these centres are based are equivalent to the DIN 51130 ones. These centres are mainly those that meet the requirements set out in EN ISO/IEC 17025 [17] or EN ISO/IEC 17065 [3].

Test certificates issued under this standard contain the results of the DIN 51130 test and the resulting assessment in accordance with P.2.

P.2 Testing and assessing anti-slip properties

The procedure for testing anti-slip properties is governed by DIN 51130.

Attention is drawn to the fact that the intermediary medium of oil in the DIN 51130 test procedure is not used to give the test a particularly adverse operating condition. The use of specific, defined oil is used as a constant test parameter with which, as has been proved, better differentiation of the test results is achieved.

NOTE This procedure is based on the persons carrying out the test treading on the covering to be tested on an inclined plane. It is used as an aid to deciding whether the respective covering is suitable for use on lifts.

The average inclination angle determined from a range of measurements is critical for classifying the covering in one of five assessment groups. The assessment group is used as a benchmark for the level of anti-slip properties where coverings in assessment group R 9 meet the lowest anti-slip requirements and those in assessment group R 13 the highest. The allocation of assessment groups to the angle ranges is shown in Table P.1.

Table P.1 — Allocating the overall average values of the inclination angles to the anti-slip assessment groups

Overall average value	Assessment group
from 6° to 10°	R 9
over 10° to 19°	R 10
over 19° to 27°	R 11
over 27° to 35°	R 12
greater than 35°	R 13

The assessment of the anti-slip properties of coverings with surface profiles arranged in a specific direction shall be based on average values that take into consideration the place the coverings are laid and the direction the users walk on them.

Coverings that meet at least assessment group R 9 are considered anti-slip for indoor installations and at least assessment group R 10 for outdoor installations.

Annex ZA
(informative)

Relationship between this European Standard and the Essential Requirements of EU Directive 95/16/EC

This European Standard has been prepared under a mandate given to CEN by the European Commission and the European Free Trade Association to provide a means of conforming to Essential Requirements of the New Approach Directive 95/16/EC amended by Directive 2006/42/EC.

Once this standard is cited in the Official Journal of the European Union under that Directive and has been implemented as a national standard in at least one Member State, compliance with the normative clauses of this standard confers, within the limits of the scope of this standard, a presumption of conformity with the relevant Essential Requirements of that Directive and associated EFTA regulations.

WARNING — Other requirements and other EC Directives may be applicable to the product(s) falling within the scope of this standard.

NOTE 1 Regarding 5.3.2, 5.3.3, 5.3.5 and 5.3.7 see Introduction, 0.3 Principles of this standard.

NOTE 2 5.2.2.3 implies that the installation of lifts with partially enclosed wells may be subject to the authorization of national authorities.

Bibliography

[1] CEN/TR 81-10, *Safety rules for the construction and installation of lifts — Basics and interpretrations — Part 10: System of the EN 81 series of standards*

[2] CEN/TR 14819-1:2004, *Safety recommendations for cableway installations designed to carry persons — Prevention and fight against fire — Part 1: Funicular railways in tunnels*

[3] EN ISO/IEC 17065, *Conformity assessment — Requirements for bodies certifying products, processes and services (ISO/IEC 17065)*

[4] HD 516 S2, *Guide to use of low voltage harmonized cables*

[5] EN 60204 (all parts), *Safety of machinery — Electrical equipment of machines (IEC 60204, all parts)*

[6] EN 13107, *Safety requirements for cableway installations designed to carry persons — Civil engineering works*

[7] EN 1997-1, *Eurocode 7: Geotechnical design — Part 1: General rules*

[8] EN 12930, *Safety requirements for cableway installations designed to carry persons — Calculations*

[9] EN 1991-1 (all parts), *Eurocode 1: Actions on structures*

[10] EN 1991-1-4, *Eurocode 1: Actions on structures — Part 1-4: General actions — Wind actions*

[11] EN 1998-1, *Eurocode 8: Design of structures for earthquake resistance — Part 1: General rules, seismic actions and rules for buildings*

[12] EN 81-77:2013, *Safety rules for the construction and installation of lifts — Particular applications for passenger and good passengers lifts — Part 77: Lifts subject to seismic conditions*

[13] EN 12929-1, *Safety requirements for cableway installations designed to carry persons — General requirements — Part 1: Requirements for all installations*

[14] HD 60364-5-54, *Low-voltage electrical installations — Part 5-54: Selection and erection of electrical equipment — Earthing arrangements and protective conductors (IEC 60364-5-54)*

[15] DIN 51130, *Prüfung von Bodenbelägen — Bestimmung der rutschhemmenden Eigenschaft — Arbeitsräume und Arbeitsbereiche mit Rutschgefahr, Begehungsverfahren — Schiefe Ebene (EN: Testing of floor coverings — Determination of the anti-slip properties — Workrooms and fields of activities with slip danger, walking method — Ramp test; FR: Essais des révêtements de sol — Détermination de la résistance au glissement — Pièces et zones de travail exposées aux risques de glissement — Méthode de marche sur plan incliné)*

[16] BGR 181:2003, *Fußböden in Arbeitsräumen und Arbeitsbereichen mit Rutschgefahr*

[17] EN ISO/IEC 17025, *General requirements for the competence of testing and calibration laboratories (ISO/IEC 17025)*

[18] EN 61508-4, *Functional safety of electrical/electronic/programmable electronic safety-related systems — Part 4: Definitions and abbreviations (IEC 61508-4)*

[19] EN 61508-5, *Functional safety of electrical/electronic/programmable electronic safety-related systems — Part 5: Examples of methods for the determination of safety integrity levels (IEC 61508-5)*

[20] EN 61508-6, *Functional safety of electrical/electronic/programmable electronic safety-related systems — Part 6: Guidelines on the application of IEC 61508-2 and IEC 61508-3 (IEC 61508-6)*

This page deliberately left blank

This page deliberately left blank

British Standards Institution (BSI)

BSI is the national body responsible for preparing British Standards and other standards-related publications, information and services.

BSI is incorporated by Royal Charter. British Standards and other standardization products are published by BSI Standards Limited.

About us

We bring together business, industry, government, consumers, innovators and others to shape their combined experience and expertise into standards -based solutions.

The knowledge embodied in our standards has been carefully assembled in a dependable format and refined through our open consultation process. Organizations of all sizes and across all sectors choose standards to help them achieve their goals.

Information on standards

We can provide you with the knowledge that your organization needs to succeed. Find out more about British Standards by visiting our website at bsigroup.com/standards or contacting our Customer Services team or Knowledge Centre.

Buying standards

You can buy and download PDF versions of BSI publications, including British and adopted European and international standards, through our website at bsigroup.com/shop, where hard copies can also be purchased.

If you need international and foreign standards from other Standards Development Organizations, hard copies can be ordered from our Customer Services team.

Subscriptions

Our range of subscription services are designed to make using standards easier for you. For further information on our subscription products go to bsigroup.com/subscriptions.

With **British Standards Online (BSOL)** you'll have instant access to over 55,000 British and adopted European and international standards from your desktop. It's available 24/7 and is refreshed daily so you'll always be up to date.

You can keep in touch with standards developments and receive substantial discounts on the purchase price of standards, both in single copy and subscription format, by becoming a **BSI Subscribing Member**.

PLUS is an updating service exclusive to BSI Subscribing Members. You will automatically receive the latest hard copy of your standards when they're revised or replaced.

To find out more about becoming a BSI Subscribing Member and the benefits of membership, please visit bsigroup.com/shop.

With a **Multi-User Network Licence (MUNL)** you are able to host standards publications on your intranet. Licences can cover as few or as many users as you wish. With updates supplied as soon as they're available, you can be sure your documentation is current. For further information, email bsmusales@bsigroup.com.

Revisions

Our British Standards and other publications are updated by amendment or revision.

We continually improve the quality of our products and services to benefit your business. If you find an inaccuracy or ambiguity within a British Standard or other BSI publication please inform the Knowledge Centre.

Copyright

Useful Contacts:

Customer Services
Tel: +44 845 086 9001
Email (orders): orders@bsigroup.com
Email (enquiries): cservices@bsigroup.com

Subscriptions
Tel: +44 845 086 9001
Email: subscriptions@bsigroup.com

Knowledge Centre
Tel: +44 20 8996 7004
Email: knowledgecentre@bsigroup.com

Copyright & Licensing
Tel: +44 20 8996 7070
Email: copyright@bsigroup.com

BSI Group Headquarters

389 Chiswick High Road London W4 4AL UK

bsi.

...making excellence a habit.™